Blue Book

Specifications and Requirements for Gas Installations

2.17.09

nationalgrid

The power of action.℠

Specifications and Requirements for Gas Installations

ENERGY STAR

nationalgrid

The power of action.℠

IMPORTANT NOTICE

REGARDING

NATIONAL GRID SPECIFICATIONS AND REQUIREMENTS FOR GAS INSTALLATIONS

These Specifications and Requirements have been designed with great care so that, when followed consistently, they will ensure that a new installation will comply with New York State law, various codes and other safety requirements. Failure to comply may result in a code or safety *violation* and/or a job not being approved. Therefore, delays could result while the contractor corrects the changes at his/her expense.

The specifications, construction standards and other requirements contained in this book represent National Grid commitment to the contracting community for quality and consistency of service. Any variation from the type of hardware used, connection point of service, service entrance or other details on a construction standard must be approved in advance by National Grid in writing.

We at National Grid are always available to discuss your design concerns and to provide assistance to you. We encourage any questions regarding your problems on specific projects, please be sure to contact us for our input during the *planning* stages to avoid possible additional costs later in the job.

Edward Angelone – Gas Sales & Marketing
Paul Gugliotta – Materials & Standards/Gas Engineering
Carl Krause – Gas Sales Fulfillment / Technical Lead
Anthony Natalie - Gas Sales & Marketing
William Pike – Field Operations
Robert Polinsky – Customer Meter Services, Bellmore
Perry Sheth P.E, - Materials & Standards/Gas Engineering
Kyle Wasnieski, Customer Meter Services, Greenpoint
Robert Zabielski - Gas Sales & Marketing

TABLE OF CONTENTS

1.0 INTRODUCTION 1
1.1 PURPOSE 1
1.2 SCOPE/REFERENCES 1
1.3 EXCLUSIONS; RETROACTIVITY 2
1.4 ALTERNATE MATERIALS, EQUIPMENT AND PROCEDURES 2
1.5 RESPONSIBILITY 2

2.0 DEFINITION OF TERMS 2

3.0 GENERAL 9

3.1 AREA/GEOGRAPHICAL CONSIDERATIONS 9
3.2 COMMUNICATION/COOPERATION 9
3.3 MEANING OF **"SHALL"** IN THIS BOOK 10
3.4 STATE AND LOCAL CODES 10
3.5 RESPONSIBILITY FOR CODE APPLICABILITY 10
3.6 INSPECTIONS, CERTIFICATES, PERMITS 10
3.7 ACCESS TO CUSTOMERS' PREMISES 10
3.8 IDENTIFICATION OF EMPLOYEES 10
3.9 UNAUTHORIZED CONNECTIONS 11
3.10 SEALS AND TAMPERING DEVICES 11
3.11 DISCONNECTION OF SERVICE 11
3.12 REACTIVATING GAS SERVICE FOLLOWING A WARNING TAG VIOLATION 11
3.13 NATIONAL GRID EQUIPMENT ON PRIVATE PROPERTY 11
3.14 DEMOLITION 11
3.15 INTERCONNECTIONS 12
3.16 BACK-PRESSURE AND SUCTION PROTECTION 12
3.17 PROTECTION WHEN COMPRESSED AIR OR OXYGEN CAN ENTER GAS PIPING 12
3.18 ADEQUACY AND SAFETY 12
3.19 CODE COMPLIANCE 12
3.20 REVISIONS OF THIS BOOK 13

4.0 NEW GAS SERVICE INSTALLATION PROCESS 13
4.1 GENERAL 13
4.2 REQUIREMENTS FOR HAVING A NEW RESIDENTIAL AND SMALL COMMERCIAL GAS SERVICE INSTALLED 15
4.3 RUD AND CIPUD SERVICE 16

5.0 GAS SERVICE LINE(S) 20
5.1 GAS SERVICE LINE(S) TO A BUILDING OR OTHER GAS USAGE 20
5.2 LOCATION OF GAS SERVICE LINE(S)/LATERAL(S) 21

5.3 SERVICE ENTRANCE……..... 21

5.4 CONNECTION POINT OF SERVICE, BROOKLYN UNION/CUSTOMER CONNECTION POINT OF GAS SERVICE 22
5.5 RESTORATION ON PRIVATE PROPERTY 22
5.6 ADDITIONAL METERS OR SERVICES..... 22

6.0 GAS PRESSURE..... 22
6.1 NOMINAL METER OUTLET PRESSURE WHEN SERVED FROM BROOKLYN UNION'S HIGH PRESSURE DISTRIBUTION SYSTEM 22
6.2 METER OUTLET PRESSURE WHEN SERVED FROM NATIONAL GRID'S LOW PRESSURE DISTRIBUTION SYSTEM 23
6.3 PRESSURE AND CONTRACTOR'S PIPING ..... .23
6.4 ELEVATED METER OUTLET PRESSURE ON HIGH PRESSURE DISTRIBUTION SYSTEM 23
6.5 ELEVATED METER OUTLET PRESSURE ON LOW PRESSURE DISTRIBUTION SYSTEM 24
6.6 LOCAL CODES RELATING TO ELEVATED GAS PRESSURES 24

7.0 METERS AND REGULATORS..... 24
7.1 PREREQUISITES AND NOTIFICATIONS FOR NEW GAS METERS..... 24
7.2. METER SET LOCATION REQUIREMENTS..... 25
7.3 INSTALLATION AND INTERCONNECTION REQUIREMENTS 26
7.4 INDOOR METER SET REQUIREMENTS..... 27
7.5 INDOOR METER SET REQUIREMENTS FOR LARGE INSTALLATIONS..... 28
7.6 MULTIPLE METER HEADER REQUIREMENTS 29
7.7 METER SET PROTECTION REQUIREMENTS 29
7.8 METER HEADER PAD REQUIREMENTS FOR LARGE GAS INSTALLATIONS 30
7.9 WALLS TO SUPPORT METER HEADER REQUIREMENTS 30
7.10 RELOCATION OF GAS METER SETS 30
7.11 GAS SERVICE REGULATOR AND VENTING REQUIREMENTS..... 31
7.12 METER BYPASS REQUIREMENTS……..31
7.13 TELEMETERING INSTALLATION REQUIREMENTS 32
7.14 METER INSTALLATION, PURGING AND RELIGHTING..... 32
7.15 PILOT GAS SUPPLY FOR INTERRUPTIBLE RATE CUSTOMERS..... 32

8.0 CUSTOMER-OWNED GAS PIPING SYSTEMS 32
8.1 GENERAL..... 32
8.2 PIPE SIZING 33
8.3 PIPING DRAWING 34
8.4 GAS PIPING MATERIALS..... 34
8.4.1 GENERAL..... 34
8.4.2 GAS PIPING MATERIALS, INDOORS 34
8.4.3 GAS PIPING MATERIALS, OUTDOORS, ABOVE GROUND 35
8.4.4 GAS PIPING MATERIALS, BELOW GROUND, GENERAL 35
8.4.5 GAS PIPING BELOW GROUND, STEEL PIPE OPTION..... 36
8.4.6 GAS PIPING BELOW GROUND, PLASTIC PIPE OPTION 36
8.4.7 GAS "PIPING" BELOW GROUND, COPPER TUBING OPTION 37
8.5 VALVES……..... 37
8.6 STEEL GAS PIPING, WELDING REQUIREMENTS 38

8.6.1 GENERAL……..38
8.6.2 RESIDENTIAL, COMMERCIAL, INDUSTRIAL, MULTI-FAMILY INSTALLATIONS IN NASSAU AND SUFFOLK COUNTIES 38
8.6.3 ALL PUBLIC AND PRIVATE SCHOOL BUILDINGS, INCLUDING COLLEGES 39
8.6.4 TESTING REQUIREMENTS OF PIPING AFTER THE METER…….39
8.6.5 STANDARDS FIR NON MERCURY GAUGE……..……39
8.6.6 WELDER QUALIFICATIONS……40
8.7 GAS PIPING (INDOORS AND OUTDOORS) ABOVE GROUND, INSTALLATION REQUIREMENTS, GENERAL 40
8.8 GAS PIPING OUTDOORS, BELOW GROUND, INSTALLATION REQUIREMENTS..... 42
8.9 STEEL GAS PIPING , CORROSION PROTECTION REQUIREMENTS, COATING AND WRAPPING 43
8.10 STEEL GAS PIPING, CORROSION PROTECTION REQUIREMENTS, INSULATING JOINTS 44
8.11 STEEL GAS PIPING, CORROSION PROTECTION REQUIREMENTS, MAGNESIUM ANODES 44
8.12 PLASTIC PIPING, INSTALLATION REQUIREMENTS..... .45
8.13 COPPER TUBING INSTALLATION REQUIREMENTS..... 46
8.14 GAS PIPING THROUGH BUILDING WALLS, ABOVE OR BELOW GROUND, INSTALLATION REQUIREMENTS 46
8.15 PRESSURE TESTING OF GAS PIPING 47

9.0 GAS UTILIZATION EQUIPMENT 47
9.1 GENERAL..... 47
9.1.1 APPLIANCES, ACCESSORIES AND EQUIPMENT APPROVAL 47
9.1.2 INSTALLING CONTRACTOR'S RESPONSIBILITIES..... 47
9.1.3 CO ALARMS 48
9.1.4 ASSEMBLY OF EQUIPMENT 48
9.1.5 GAS UTILIZATION EQUIPMENT INSTALLED IN RESIDENTIAL GARAGES……48
9.2 NATIONAL GRID "NATURAL GAS PRESSURE, IGNITION & DRAFT TEST" 48
9.3 GENERAL REQUIREMENTS, SPACE AND WATER HEATING EQUIPMENT INSTALLATIONS 48
9.4 COMBUSTION, DILUTION AND VENTILATION AIR (FRESH AIR) REQUIREMENTS..... 48
9.5 VENTING OF **CA**TEGORY I GAS UTILIZATION EQUIPMENT ONLY 49
9.6 VENTING OF GAS UTILIZATION EQUIPMENT - CATEGORIIES II**,** III AND IV..... 49
9.7 CHIMNEYS..... 50
9.8 SPILL SWITCH REQUIREMENTS..... 50
9.9 INSTALLATION OF HEAT PRODUCING EQUIPMENT IN FLAMMABLE OR CORROSIVE ATMOSPHERES ……50

9.10 GAS CONVERSIONS AND CONVERSION BURNER REQUIREMENTS 51
9.11 GAS FIREPLACES (VENTED DECORATIVE GAS APPLIANCES) 52
9.12 ILLIMINATING DEVICES 52
9.13 NATURAL GAS COMBUSTION ENGINES 53
9.14 COMPRESSED NATURAL GAS (CNG) STATIONS 53
9.15 UNVENTED ROOM HEATERS 53
9.16 OTHER EQUIPMEMNT 53
9.17 COMBO WATER HEATERS 53

APPENDICES

APPENDIX A SERVICE REGULATOR VENT PIPING REQUIREMENTS
APPENDIX B CHOOSING A FURNACE OR BOILER
APPENDIX C NATIONAL GRID'S NEW METER SET HOTLINE
APPENDIX D GAS PIPING SYSTEM PRESSURE TESTING REQUIREMENTS AND INSTRUCTIONS
APPENDIX E CUSTOMER OWNER GAS PIPING INSPECTION CERTIFICATE
APPENDIX F CORRIGATED ATAINLESS STEEL TUBING
APPENDIX G NEW YORK STATE CO ALARM LAW RULE
APPENDIX H PROPERTIES OF NATURAL GAS
APPENDIX I METER SIZES AND DIMENSIONS
APPENDIX J FREQUENTLY USED STANDARDS

Blue Book PART II – Temperature Controlled Specifications

1.0 INTRODUCTION

1.1 PURPOSE

This book presents specifications and requirements relating to the connection and use of natural gas supplied from facilities. It contains the minimum acceptable standards for gas piping and gas appliance installation necessary to ensure the safe and satisfactory utilization of natural gas by our customers. The information contained herein is intended primarily to assist the installer in the new gas installation process, but it is also intended for use by our customers, by architects and engineers, and finally, by people in various departments at National Grid . It shall be used when a customer's gas installation is new, when a customer is increasing gas usage from a smaller capacity, or when any changes are made from the original installation. It represents a collection of information which will provide for a safe, properly conceived, accurately sized and cost effective installation that will give long lasting, satisfactory service to our customers.

1.2 SCOPE/REFERENCES

The contents of this book apply to installations connecting gas supply system to a customer's premises. We have made it as comprehensive as is practical, within the limits of the intended overview of the subject matter it addresses. The intent of the book is to provide a framework for the subject, not a collection of specific information from various sources. Generally, it refers to several primary documents which form its basis:

a. The National Fuel Gas Code (NFPA 54/ANSI Z223.1), latest revision, referred to in the book as NFPA 54**,** and

b. The New York State Codes, Rules and Regulations Title 19 (16 NYCRR 255 and 261), latest revision, referred to in the book as ***NYCRR*.**

c. Fuel Gas Code of New York State (FGCNYS)

d. Plumbing Code of New York State

e. Residential Code of New York State

f. Energy Conservation Code of New York State

It is important to note here that **New York City,** towns, villages, counties, etc., frequently have codes to which the owner or his/her plumbing contractor is expected to adhere. It is ***the owner's or installer's responsibility*** to become aware of the requirements of the area in which the installation is to take place. The reference to the latest revision of the National Fuel Gas Code (NFPA54) is intended to be followed in New York City. The reference to the latest revision of the Fuel Gas Code of New York State (FGCNYS) is intended to be followed in areas outside New York City, but within New York State (Nassau and Suffolk Counties).

The New York City Construction Codes are effective July 1, 2008, but will not be mandated for new construction projects until July 1, 2009. The Construction Codes consist of Administrative Provisions, Building, Fuel Gas (NYCFGC) Mechanical and Plumbing Codes.

It is important to note here that New York City**,** towns, villages, counties, etc., frequently have codes to which the owner or his/her plumbing contractor is expected to adhere. It is the owner's or installer's responsibility to become aware of the requirements of the area in which the installation is to take place. The reference to the latest revision of the ***New York City Fuel Gas Code*** is intended to be followed in New York City. The reference to the latest revision of the Fuel Gas Code of New York State (FGCNYS) is intended to be followed in areas outside New York City, but within New York State (Nassau and Suffolk Counties), in addition all areas may be subject to the latest edition of the National Fuel Gas Code (NFPA 54)

1.3 EXCLUSIONS; RETROACTIVITY

Unless otherwise stated, the provisions of this book shall not be applied **retroactively** to existing installations and/or systems that were in compliance with the Rules and Regulations/Specifications and Requirements in effect at the time of installation. In cases where modifications are being made, those modifications shall be installed to conform to the specifications and requirements of this book.

1.4 ALTERNATE MATERIALS, EQUIPMENT AND PROCEDURES

If the contents of this book are not applicable to the equipment to be installed, or if an alternate installation method or alternate usage of material is being considered that is not covered in this book, National Grid shall be contacted for definition or clarification before proceeding with the installation. Sufficient technical documentation, such as a manufacturer's written instruction, must be submitted to substantiate any claims made regarding the safety of such alternatives.

1.5 RESPONSIBILITY

Pursuant to Gas Tariff's, notwithstanding any inspection by National Grid of a customer's equipment or equipment installation or any failure by National Grid to reject an equipment installation, National Grid does not provide any warranty, expressed or implied, as to the adequacy, safety or other characteristics of any structures, equipment, wires, pipes appliances or devices owned, installed or maintained by the customer or leased by the customer from third parties.

2.0 DEFINITION OF TERMS

The following definitions of terms used in this book have been assembled from various sources, and have been edited to be meaningful for use in this context and in the gas utility business.

Accessory: A device or material used to conduct gas or used in conjunction with an “appliance". In this book, some examples of accessories are valves, thermostats, appliance connectors, pressure regulators, draft hoods and interior house piping.

AGA: American Gas Association; an organization made up of most American gas utilities, producers and transporters, which sets standards and disseminates information throughout the gas industry in the interest of bettering industry practices and advancing safety.

Appliance: A self-contained device, such as a range or boiler, that converts energy into heat or other useful purpose. In this book, appliance usually relates to furnaces, boilers or water heaters.

Applicant: A potential customer.

Booster: A centrifugal blower selected to increase gas pressure when the pressure in the gas main at the customer's location is insufficient for a customer's requirements. Boosters are usually required only in industrial or commercial applications. A booster is a machine that is designed to operate on a flat pressure vs. flow curve, which enables it to provide variable flow at an essentially constant pressure. Boosters for natural gas service normally are selected to increase pressure to no more than 28" of water column (W.C.), and are normally furnished hermetically sealed.

BTU, Btu: Abbreviation for British Thermal Unit. A Btu is a unit of energy defined as the amount of heat required to raise one pound of water one degree on the Fahrenheit scale, normally from 60 degrees F to 61 degrees F.

BTUH, Btuh: Abbreviation for British Thermal Units per hour. Also expressed as **Btu/Hr.** A standard measure of energy input and output. Typically used in the gas utility industry as a measure of the total, or capacity, of a gas appliance, such as a boiler or a furnace.

Building: A structure that stands alone or is separated from adjoining structures by fire walls with all openings therein protected by approved **fire** doors. In certain applications, a **party** wall may be required instead of a fire wall.

CFH, cfh: Abbreviation for cubic feet per hour. A standard measure of gas flow. Generally understood to mean, and often used interchangeably with, **SCFH** or **Scfh,** or standard cubic feet per hour, meaning gas measured at "standard conditions", or 60 degrees Fahrenheit and atmospheric pressure (14.7 psia or 30" mercury absolute). Typically used in the gas utility industry to express gas flow to a customer's premises and through the customer's piping. For gas flowing at the pressures generally used in a customer's premises (about 6" W.C.), flows **expressed in cfh can be assumed,** for use in calculations such as determining pressure drop in piping and valves, **to mean scfh,** with a negligible margin of error. (This assumption is not valid for metering and billing calculations where the pressures are corrected back to 7" W. C., or 0.25 pounds per square inch [PSIG].)

CIPUD: Commercial/Industrial Project underground distribution – a National Grid term used to describe a new commercial and industrial development project where all the utilities are furnished underground in a common trench. See RUD for residential projects and additional information.

CKAD: Customer/National Grid Agreement Date. An acronym used by National Grid to describe the date we have committed to for completion of a gas installation.

Connection Point of Service: That point in the gas service line where responsibility ends and the customer's responsibility begins; or that point where gas service **piping** ends and customer-owned piping begins. Also known as Connection Point, Connection Point of Gas Service, National Grid/Customer Connection Point of Gas Service, Point of Delivery, Point of Service and Customer Interface. The Connection Point of Service may be located physically at

different points in the piping, depending on the meter header configuration used, as defined on Construction Standards.

Construction Standard: A technical instruction, usually a drawing, but often including diagrams and tables, prepared and agreed to within **National Grid** as a standard method of performing a task, and used for the installation of gas facilities. See Project Manager for a copy of the latest job specific Construction Standard.

Contractor: A licensed/qualified installer of gas utilization equipment and associated piping, ductwork and controls.

Conversion, Gas Conversion: An installation where an appliance originally designed for use with a fuel other than natural gas has been modified to use natural gas, without extensive modifications to the original appliance. A typical gas conversion modifies only the burner of the appliance.

CSA - CSA International - an organization that tests equipment and accessories to insure it is suitable for use in a specific manner or certified to be listed to a specific Standard.

Customer: A user of gas. A customer may be a person, firm, partnership, corporation, association, developer, builder, or governmental agency to whom gas is supplied and billed by National Grid . All National Grid customers are provided, emergency assistance at no charge, covering generic concerns relating to the meter, the gas service, gas odor reports, low or high gas pressure, gas service outages, and other unusual conditions relating to the gas supply.

> ***Residential*** Customer: A customer supplied by National Grid with gas service at premises used as his/her residence, or a landlord's residence, through a separate meter.
>
> ***Commercial*** Customer: A customer supplied by National Grid with gas service at his/her business premises through a separate meter.
>
> ***Multiple Dwelling*** Customer: A customer supplied by National Grid with gas service at premises used as his/her residence, but in a multiple dwelling building, normally through a separate meter, but sometimes through a common meter as conditions warrant.
>
> ***Interruptible*** Customer: A customer supplied by National Grid with gas service at his/her business premises through a separate meter, that may be interrupted at critical times as agreed to by the contract with National Grid . These customers **shall** have the capability of burning a second fuel, when the gas service is interrupted.
>
> **Temperature Controlled Customer: A customer supplied by National Grid with gas service at his/her business premises through a separate meter, that will be interrupted at an annually pre defined temperature as agreed to by the contract with National Grid. These customers <u>should</u> have the capability of burning a second fuel, when the gas service is interrupted.**

Transportation Customer: Residential or commercial customers who purchase natural gas directly from a gas supplier, rather than from a utility. The customer contracts with a gas broker, who arranges monthly with a supplier, a gas pipeline company and National Grid to have quantities of gas transported directly to him/her (the customer). Transportation customers are billed both by the gas broker and by National Grid. The broker's bill reflects the commodity cost, the transportation cost (interstate pipeline) and the broker's commission.

***Customer Owned Piping*:** Is defined as all piping above ground and below ground installed after the meter. It is the customer's responsibility to install, test, maintain and keep records of this piping.

Dekatherm: A therm multiplied by 10 (10 therms). A commonly used quantity of gas used for billing purposes. Also see ***therm.***

Elevated Pressure Gas supplied to a customer's equipment at pressures greater than 7" W.C. (0.25 PSIG).

Easement: Right to pass over, occupy or use another's land for the placement and access of company service facilities.

Fire Wall*:* Similar to a Party Wall in construction, is generally an *internal* wall. However, openings, between adjoining areas, such as fire doors, or extensions of facilities, are permitted in firewalls. Both party walls and firewalls may have different construction requirements and/or different fire ratings, depending on the type of building. Consult state and local codes for further clarifications.

Gas Business Lead: The National Gas Marketing and Sales employee who is the prime contact for the customer when a new installation or a conversion is undertaken. The Gas Business Lead provides economic, technical and policy information regarding the use of natural gas for all applications; e.g. heating, water heating, process uses, etc. ***New Construction Representatives*** handle gas heating for all new home and development construction and ***Commercial and Industrial Representatives*** handle the commercial **Industrial and Multi family** market. **Key Account Executives handle** large buildings and chain accounts (e.g. schools, hospitals, department stores.

Gas Distribution System, Low Pressure: A gas distribution piping system in which the pressure is substantially the same as the standard pressure delivered to the customer and where service regulators are not installed.

Gas Distribution System, High Pressure: A gas distribution piping system in which the pressure is nominally higher than the standard pressure delivered to the customer and therefore requires a service regulator. gas distribution system may furnish gas to the customer's service location at several different pressures, depending on the geographical area served. For the purposes of this book, all pressures are referred to as ***high pressure.*** For information, pressures serving the areas may be: Intermediate - nominally ***50"*** w.c. (2 psig); Medium nominally 10 or 30 psig; or high - 60 psig or higher.

Gas Service, Gas Service Line: A gas service, or gas service line, is the pipe that provides gas from a gas main in a public area to a customer's building. The gas service is installed and owned by National Grid in most cases. ***Gas service line means the piping, including***

associated metering and pressure reducing device(s), that transports gas below grade ***from a main to the outside of the building foundation wall where the meter is located outside the building. If the meter is located inside the building, the service line terminates at the first accessible fitting inside a wall of the customer's building.*** In some specific cases, because of unique physical conditions, contractor installed, buried, customer-owned piping must be ***treated as a gas service,*** and must therefore be installed in strict accordance with Section 8 of this book.

Gas Technical Lead: The National Grid person from the Gas Sales Project Management or C.M.S. (Customer Meter Services) who is the technical contact for the customer when a new installation or a conversion is undertaken.

IAS: International Approval Service – An organization that tests equipment to insure it is suitable for use in a specific manner.

Integrated Schedule: Also National Grid/Builder Integrated Schedule. A preliminary schedule used in RUD projects as well as selected commercial gas-only jobs, that specifies design and construction activities, milestones and commitments agreed to between National Grid and the builder(s).

Installer: See Contractor.

Labeling: "appliances shall be listed and labeled" (no longer MEA required, OTCR (Office of Technical Certification and Research) created to recognize code-prescribed and alternative materials)

LIPA: Long Island Power Authority.

Listed: Equipment or material included in a list published by an organization acceptable to National Grid, such as the IAS or Underwriters Laboratories (UL) **MEA**, and concerned with product evaluation that maintains periodic inspection and evaluation of the production of listed equipment or materials. A typical listing states that the equipment or material meets appropriate standards or has been tested and found suitable for use in a specified manner.

Low Pressure Service: Gas supplied to a customer from a low pressure gas main.

Meter: The instrument used to measure and indicate and/or record the volume of gas that has been delivered to a customer.

Meter Bar: A specialized item of hardware that functions as a connecting device between the gas service line and the gas meter.

Meter Set: The term used to describe the meter and its related piping and equipment. Often synonymous with ***meter header, meter installation.***

Meter Header: The piping and equipment installed at a customer location relating to and in support of the meter.

Multiple*-Family *Building: A structure, including row houses, enclosed within exterior walls or fire walls, built, erected and framed of component structural parts, and designed to contain five or more individual dwelling units for permanent residential occupancy.

Multiple Services to a Building - only one service <u>will normally</u> be permitted to a building; a separate building shall consist of either a detached, separate structure, or an attached structure separated from the first structure by a party wall, as defined in the New York State Uniform Fire Prevention and Building Code.

Nominal: The standard pressure at which National Grid furnishes gas to customers. Nominal pressure depends on the pressure of gas main at a given installation. When served from a high pressure main, nominal pressure is ***6" W.C.*** When served from a low pressure main, nominal pressure can vary from 4.0" W. C. to 9.5" W. C. Nominal pressure is taken to be the pressure measured at the **connection point of service.** See Section 6.0 of this book for more information.

Party Wall: **A party *wall shall* contain no openings therein. A party wall shall be continuous from the lowest floor level of the building through the roof membrane, and shall terminate in a two foot parapet (except where properly sealed at the roof level). Party walls shall bear the proper fire rating as per the NY State Code, and shall be smoke tight at the exterior walls. They shall also be capable of supporting either side of the roof assembly in the event of a collapse.**

Project Manager: National Grid's primary contractor liaison for large volume equipment installations. The PM is responsible for many of the new gas equipment installations in the non - Residential (other than 1 to 5 family) markets.
To qualify to be a PM installation the site requires either a new or replacement gas service to be installed , or any added load with a cumulative of 500 cfh or above. PMs also handle all new or replacement Temperature Controlled installations (T.C.)

Red Line: A preliminary drawing used in RUD projects. The Red Line drawing is prepared using a builder's site plan, and indicates trench footage and proposed locations of electric facilities, **in Nassau, Suffolk and Rockaway Peninsula.**

Regulator: A device used to reduce the pressure of gas from a higher pressure at its inlet to a lower pressure at its outlet, maintaining that pressure essentially constant, while also controlling the flow of gas; usually mounted directly in gas piping.

Regulator, Line: A regulator (see definition above) used on elevated pressure installations (pressures greater than the nominal 6" W.C.), that is mounted in the house line between the service regulator and the appliance regulator, and reduces gas pressure from that elevated pressure to the typical nominal houseline pressure of 6" W.C.

***Regulator, Service*:** A regulator that reduces and controls gas main pressure to the pressure of the customer's house line. Usually set by National Grid to supply gas at 6" W. C., gas at a higher pressure can be furnished if the end-using equipment is specified by the manufacturer to require a higher pressure. This regulator is furnished, installed and maintained by National Grid.

Regulator, Appliance: A regulator (see definition above) mounted at the appliance, (normally furnished with the appliance) that reduces the house line pressure to the pressure utilized by the appliance.

RUD: Residential Underground Distribution. A National Grid term used to describe a new building project for residential developments of five or more dwelling units where all the utilities are furnished underground in a common trench. Extensive coordination is required within National Grid regarding the electric and gas installations to the development, as well as coordination outside with other utilities, such as telephone and cable television.

RUD Fast Track: A program designed to enable National Grid to construct and install natural gas and electric house services and set the appropriate meters within14 –21 business days from the date the services are requested by the project builder.

School: A place, public or private, where children or adults gather for educational purposes.

Security Valve: A control valve, installed on a meter header, usually for a large load, that is set to close automatically upon sensing one or more gas parameters, usually high and low pressure. A meter header using a security valve is normally designed by National Grid.

Sediment Trap: "a tee fitting with a capped nipple in the bottom opening of the run of the tee or other device approved as an effective sediment trap – to collect solid foreign particles to prevent such material from entering close-fitting parts or small passageways (e.g., valves and orifices)

Service Riser: **(Sweep el)** That portion of gas service line where the piping comes out of the ground.

Tariff: A compilation of written definitions, statements, rates, rules and regulations that together describe basis for doing business, and that have been approved by the New York State Public Service Commission.

Technical Lead: See ***Gas Technical Lead:***

Therm: A unit of heating value equivalent to 100,000 BTUs. Gas is normally billed by the therm, or by the ***decatherm,*** which is a therm multiplied by 10 (or 10 therms). A cubic foot of gas is generally equal to 1,000 - 1,060 BTUs as supplied by National Grid .

UL: - Underwriters Laboratory - an organization that tests equipment and accessories to insure it is suitable for use in a specific manner or certified to be listed to a specific Standard.

Warning Tag; Warning Tag Procedure: A New York State mandated set of detailed safety warning criteria in which gas utilities are required to provide notice to customers upon discovery of potentially unsafe gas piping and appliances. National Grid executes this mandate via a Warning Tag procedure, which serves notice of a problem to customers by leaving a warning tag at the premises. A warning tag is issued when a condition is identified in which a gas appliance or gas piping are deemed to present a hazard to life or property if allowed to operate in the condition found. Conditions requiring the issuance of warning tags fall into three classes:

Class A: Those conditions that present an immediate hazard and require the gas to be shut off and locked at the meter or effectively isolated in some other manner. A Class A warning tag is generally found to be associated with leaking gas piping, <u>or carbon monoxide</u>.

Class B: Those conditions that present an immediate hazard and require the gas to be shut off, but not locked at the meter, unless the hazard can be isolated from the rest of the gas system. Class B warning tags are generally found to be applicable to unsafely installed appliances or related equipment.

Class C: Those conditions that do not present an immediate hazard, but if not corrected may become hazardous. The gas will be left on. A Class C warning tag can be issued for a variety of reasons, most often related to appliances. Examples would be an improperly installed flue pipe or an electrical hazard.

W.C., w.c.: Water column; the standard scale of measurement, expressed in ***inches of water column,*** used in the natural gas industry to measure gas pressure. The units of inches of water column (W.C.) are commonly used for pressures below **1 psig.** 1 psig = 27.8" W.C. Gas customers are typically furnished natural gas at a pressure of 6" W. C. which is about 1/4 ***psig.***

3.0 GENERAL

3.1 AREA/GEOGRAPHICAL CONSIDERATIONS

The working area of National Grid Energy's Gas Business Unit **on Long Island** geographically encompasses Nassau and Suffolk Counties as well as those portions of New York City **supplied by National Grid Energy**. Therefore, in order to ensure that all installations utilizing National Grid supplied gas are consistent in their usage, but are still in compliance with regulations in these different geographical areas, the book has been designed to apply generically to all of these areas. Where it is appropriate, it addresses needs by specific geographical location. It is the customer/plumbing contractor's responsibility to become familiar with the specific requirements of the area of the installation. The reader is strongly encouraged to check with the village, town, city and county governments applicable to his/her installation, to determine if regulation changes have been made, or to determine if any new regulations have been enacted, since the creation of this document.

NOTE

The knowledge of the existence or absence of regulations within a given jurisdiction is the responsibility of the contractor.

3.2 COMMUNICATION / COOPERATION

It is our goal at National Grid to ensure that all of our customers experience safe, trouble-free and dependable gas service. Achievement of this goal begins early in the process of any gas installation. We believe that this can best be accomplished through close cooperation and communication with our customers and their contractors, to assure a quality job, during all phases of the planning and installation of a gas service. ***Therefore, it is vital that both customer and contractor provide us with preliminary information as early as is feasible in the development of plans for the installation of a new gas service or an increase in gas load***. With this information we can ensure that the scheduling of our construction work, meter installation and other service work is appropriate. It will also provide us with an early opportunity to advise customers and contractors if any unique job characteristics exist concerning gas equipment and metering facilities. This kind of communication and cooperation, along with careful adherence to the instructions

and specifications in this book, is crucial in preventing delays at any point in a job, and avoids problems that may be difficult to correct later on. We believe that this is the most effective way to ensure complete customer satisfaction with our gas service.

3.3 MEANING OF **"SHALL"** IN THIS BOOK

When used in this book, the word ***shall*** is to be understood to mean that the contractor/customer must comply to the fullest extent with the specification, action or physical requirement described. Failure to comply will result in refusal to provide a meter or connect to our gas system. Where a National Grid First Inspection is concerned, failure to implement these specifications, actions or physical requirements will result in a failed inspection. Other resultant actions could be Class "A" or Class "B", warning tag violations, which require further action by the contractor/customer before National Grid releases the job for final use by the customer, or refusal by National Grid to provide service. The meaning of the term "must" is considered to be the equivalent of the term "shall" in this book.

3.4 STATE AND LOCAL CODES

The specifications and requirements in this book are intended to supplement or amplify any State, City, Town or Village code or ordinance. If a conflict exists between a National Grid requirement and a local code requirement, the more stringent shall apply. ***It is the Contractor's responsibility to be aware of the code requirements for the area of his installation. National Grid does not assume the obligation of enforcing local code requirements.***

3.5 RESPONSIBILITY FOR CODE APPLICABILITY

The use of the information and standards contained in this book by any contractor in no way releases them from the responsibility of becoming aware of and implementing local, state or national codes that may be applicable in the location where the installation is located, except that the standards and requirements contained herein shall always apply ***when they are more stringent.***

3.6 INSPECTIONS, CERTIFICATES, PERMITS

If the local jurisdiction where an installation is being planned requires an inspection, a certificate or a permit, it is ***the owner/contractor's responsibility*** to make the appropriate arrangements.

3.7 ACCESS TO CUSTOMERS' PREMISES

National Grid shall have the right of access, at all reasonable times, to all its property installed in or on the customer's premises. This shall include items such as buried service lines and valves, exposed service lines and valves, gas meters, gas regulators, or gas regulator vents. National Grid shall reserve the right to erect, remove, operate, or maintain our facilities, and to read and test our gas meters on the customer's premises.

3.8 IDENTIFICATION OF EMPLOYEES

Every National Grid employee who is authorized to enter the customer's premises for the purpose of reading or testing meters, investigating odor complaints, or for other purposes,

is supplied with an identification card bearing his/her photograph. Employees must, upon request, show their identification cards. If anyone claims to represent the Company and fails to display an identification card upon request, the customer is advised to deny admittance to that individual and to notify both National Grid and the police.

3.9 UNAUTHORIZED CONNECTIONS

National Grid shall have the sole right to make all gas service connections to its gas distribution system.

3.10 SEALS AND TAMPERING DEVICES

No person, except a duly authorized National Grid employee/contractor shall be permitted to break or replace a seal or lock, to alter or change a gas meter or its connections or location, open or alter a meter by-pass valve, or to alter a gas pressure regulator setting.

3.11 DISCONNECTION OF SERVICE

National Grid possesses the sole right to disconnect, remove or reset gas services and/or meters, and to admit gas to any new system of piping or to any old system of piping from which the use of gas has been temporarily discontinued. When installers find it necessary to disconnect a meter or to temporarily shut off the gas, they are requested to re-connect the meter and to re-light the appliance. It is not necessary to call National Grid.

3.12 REACTIVATING GAS SERVICE FOLLOWING A WARNING TAG VIOLATION

3.12.1 When National Grid issues a Warning Tag to the customer that involves shutting off the gas supply to an individual appliance and/or a particular section of gas piping due to a hazardous condition, service does not need to be restored by National Grid. Once repaired, gas service may be restored to the effected appliance and/or piping by a licensed qualified contractor.

3.12.2 When National Grid issues a Warning Tag that involves the gas supply being shut-off and locked at the meter, the contractor or customer shall notify National Grid that the hazardous condition has been corrected and request that National Grid turn on the gas supply.

3.13 NATIONAL GRID EQUIPMENT ON PRIVATE PROPERTY

All National Grid equipment located on the customer's premises, such as the gas service line, meter, regulators, meter piping, etc., remain National Grid property, and may be removed by National Grid in the event such equipment is no longer needed.

3.14 DEMOLITION

Prior to any demolition of any existing building where gas and/or electric service is installed, the gas and electric must be shut off and the gas service lateral cut by National Grid at the property line. No building demolition shall be started until gas meters and regulators have been removed and the gas service has been retired (physically disconnected) by National Grid. Call (516) 545-4943 for Long Island and (718) 643-4050 for New York City.

3.15 INTERCONNECTIONS

3.15.1 When a supplementary fuel supply for stand-by use is connected downstream of a gas meter, an adequate, full-port, three-way valve shall be installed between the meter and the stand-by fuel piping connection. The stand-by fuel piping and the natural gas piping downstream of the three-way valve shall be equipped with shut-off valves. Three-way valves of the type that completely close one port before starting to open the other port shall be used. The three-way valve shall be suitable for use in natural gas service and the supplementary fuel supply used at the site where it is installed.

3.16 BACK-PRESSURE, AND SUCTION PROTECTION

3.16.1 When the nature of a customer's utilization equipment may induce back-pressure or suction in the piping system carrying gas, suitable protection devices shall be installed and maintained by the customer. The contractor is referred to Sections 5.10 of NFPA 54 and Section 414 of the FGCNY. National Grid's project manager should be contacted when this application is to be used.

3.17 PROTECTION WHEN CQMPRESSED AIR OR OXYGEN CAN ENTER GAS PIPING

3.17.1 Protection is required whenever an installation uses compressed air or oxygen that might accidentally, or for other reasons, cause air or oxygen to enter the gas piping. The contractor is referred to Sections 6.12 and 7.12 of NFPA 54 and Section 414 of the FGCNY. Protection devices shall be installed and maintained by the customer, National Grid's project manager should be contacted when this application is to be used.

3.18 ADEQUACY AND SAEFTY

3.18.1 ***National Grid shall not be required to supply gas service until the customer's installation has been approved by the local authorities having jurisdiction***. National Grid reserves the right to withhold its service or discontinue its service, whenever an installation or part thereof is deemed by National Grid to be unsafe, inadequate or unsuitable for receiving service or interferes with or impairs the continuity or quality of our service to our customers or to others. An example of a situation where National Grid will refuse service is that in which a piping pressure test shows unacceptable results.

3.19 CODE COMPLIANCE

3.19.1 Gas appliances and gas piping installations on the customer's premises shall be installed in compliance with the minimum safety requirements of these standards and the National Fuel Gas Code. These provisions shall be applicable to new installations and to modifications of existing appliances or systems. Any appliance or system found to be in non-compliance with National Grid standards or other applicable codes shall be subject to the provisions of Warning Tag Procedure (see Definitions, Section 2.0).

3.19.2 The NYC Building codes, Fuel Gas Codes of NY State and applicable State Codes shall be followed in NYC.

3.20 REVISIONS OF THIS BOOK

3.20.1 The information in this book will be periodically revised, updated or amended **on-line only** as required by industry developments to protect the mutual interest of the customer and National Grid. The printed versions will no longer be available and shall not be referenced any longer. The on-line version will be the only valid issue of the BlueBook..

4.0 NEW GAS SERVICE INSTALLATION PROCESS

4.1 GENERAL

4.1.1 To initiate a new gas installation or to advise National Grid of an additional gas load, call ***1-877-MyNGrid*** **Nassau, Suffolk, Rockaway Peninsula), 1-800 BU Value, in New York City,** and a Gas Marketing and Sales Telerep will coordinate your request.

4.1.2 A logical progression of events and requirements for having a new gas service installation is provided in Section 4.2. It is important for contractors and customers to become familiar with this material in order to determine how a new gas service installation or a conversion progresses through the National Grid system.

4.1.3 For any new installation, the customer or his/her contractor shall provide National Grid with verifiable load information including:

- Gas pressure required at service termination point,
- New, existing and future projected loads.

Information provided to National Grid by the customer or his/her contractor regarding a proposed gas installation or an increase in load shall generally be required in writing.

4.1.4 The applicant or customer shall furnish at the premises, at his/her expense, appropriate piping and equipment for gas utilization purposes. Piping shall comply with requirements in Section 5.0, 7.0 and 8.0 of this book. Gas utilization equipment shall comply with Section 9.0 of this book.

4.1.5 Customers already using gas service from National Grid shall advise the company of any addition or substantial change in his/her equipment, such as increasing a boiler size to accommodate a new building wing or adding a swimming pool heater, or generator, ***prior to*** making such additions or changes. Any requests for equipment requiring pressure greater than 3.5” w.c. must be approved by National Grid before the equipment is purchased. In some instances elevated pressure is not available.

4.1.6 For all new installations, the customer shall be expected to provide, at his/her expense, any and all permits or certificates (except street excavation permits) usually issued by public agencies, that are associated with piping and appurtenances downstream of the meter, as part of the requirements in furnishing gas service downstream of the meter. Any easements required for the job shall also be provided by the customer at his/her expense. Plumbing permits shall be obtained by the plumbing contractor.

4.1.7 National Grid shall not be obligated to begin construction on the gas service or to supply gas to the customer until:

- The applicant furnishes all necessary permits to National Grid, and easements and/or rights of way are granted;
- The customer's application has been approved by proper officers or duly authorized representatives of the company;
- Necessary payments are made by the applicant;
- A signed contract between the customer/owner and the contractor is provided to National Grid.

4.1.8 Prior to the beginning of every job, when the Gas Business Lead deems appropriate, meetings will be held as required. At these meetings, the design and construction process will be discussed. The meetings will be arranged so that the various contractors, Gas Business Lead and Project Manager , and any other relevant representatives will be able to attend.

4.1.9 For residential and smaller commercial jobs, a planned meeting will occur before the job begins, when deemed necessary by the Gas Business Lead. For large jobs, the following planned meetings will be held: 1. A "Design" meeting at the planning stage, before many utility locations details have been worked out; and 2. An "Installation" meeting, when excavation is about to begin, and drawings are available. To provide for a well organized and trouble-free job, it is strongly recommended that, as a minimum, the General Contractor, the Plumbing and HVAC contractors attend. The agenda will include Integrated Schedule and Rules and Regulations for Gas Installations, and other relevant items affecting the job, such as locations of utilities, trenching, regulator vents, relevance of tariffs to the job, and any other potential problems regarding the job. National Grid shall coordinate these meetings and contact the appropriate parties. Other meetings will also be encouraged in order to provide for smooth and trouble-free jobs. (See Sections 7.6.2 and 7.7 for additional information.)

4.1.10 Appendix B contains requirements for construction and other information relating to the construction process. This material is intended to assist in providing a better understanding of needs, thereby allowing for better planning on a job. Although many of the materials and issues covered in this Appendix are relevant to National Grid oriented installations, the information presented is valuable for any installation in terms of understanding construction policies and philosophy.

4.2 REQUIREMENTS FOR HAVING A NEW RESIDENTIAL AND SMALL COMMERCIAL GAS SERVICE INSTALLED

4.2.1 Upon contacting the Telerep, advise if the installation is a residential, commercial or industrial building, and, if you are a builder, if it is a RUD project. The Telerep will determine if gas is available at your location. If gas is available, the Telerep will assign the job to the appropriate sales representative or Gas Business Lead, who will then identify the proper application forms and send them to you along with a packet of relevant information. Residential applicants may initiate the application process by telephone. Commercial and industrial customers are required to initiate their applications in writing. Additional information for RUD and CIPUD projects is provided in Section 4.3.

Please note that if gas is not immediately available in your area, the information in the following sections is not necessarily applicable. The Telerep will explain the process to be used.

4.2.2 The Gas Business Lead assigned to you will help determine the Rate and Service Classification most favorable to your current requirements. National Grid does not warrant that the choice will be most favorable to all possible future requirements of any applicant or customer.

4.2.3 The customer is advised that a search will be made regarding the gas history of the premises with National Grid, as well as the history of the individual applicant. If any credit arrears are reported or meter tampering or theft of service is found, it is possible that service could be denied.

4.2.4 Following receipt of the application, the Gas Business Lead/or Project Manager will schedule a field visit to the location and if the job requires a service only, will determine the preferred meter location with the customer.

4.2.5 For installations requiring a service only, the National Grid Gas Business Lead will cosign an application with the customer. In addition, National Grid must see a **signed contract** between the customer/owner and the contractor before National Grid will begin work. No exceptions will be made to this requirement.

4.2.6 National Grid will install the required facilities in accordance with a mutually agreed upon Customer/National Grid Agreement Date (CKAD). The Gas Marketing and Sales organization will track the installation with the contractor and customer for a timely completion and meter set, assuming all permits have been properly obtained.

Note:

The installation schedule is not applicable to gas main installations, but only to residential and small commercial gas services

4.2.7 It is the contractor's responsibility to obtain any necessary certificates or permits from governing authorities to ensure that a meter is set on the agreed upon date (CKAD). In addition, it is the contractor's responsibility to arrange for pressure tests.

4.2.8 When an installation requires both gas main and service, the Gas Business Lead will sign an application with the customer indicating the (CKAD) date and arrange for field measurements and design of the needed gas facility.

Note:

It is the contractor's responsibility to arrange a pressure test with the authority having jurisdiction to ensure that a meter is set by the agreed upon (CKAD) date. Pressure tests on commercial and industrial installations shall be witnessed by the local agency when required in accordance with Appendix D of this manual.

4.2.9. On conversion from liquid or solid fuels to gas, it is recommended that the chimney should be cleaned and inspected, by the installing character.

4.3 RUD AND CIPUD SERVICE

4.3.1 The following requirements apply to builders who construct homes and to land developers who primarily intend to sell improved building lots.

4.3.2 In order to initiate RUD service, the following items shall be prepared by the builder or land developer and be available prior to filing the application:

- A completed Request for National Grid Underground Installation, available at each divisional location
- A completed National Grid Gas Request Form
- Six copies of an approved site plan of the subdivision, showing the location of each lot, sidewalk, roadway/curbline, storm drains/sewers, water main and grade changes. The site plan must be approved by all governmental authorities having jurisdiction. In addition, an Auto-Cad disk is requested, if possible.
- A completed National Grid Request for Easement Information form
- Relevant load information for non-residential structures
- A copy of the preliminary construction schedule

Note:

The builder/developer may elect to perform the trenching necessary for the installation of the buried facilities in any given sub-division. The credit per trench foot for service laterals and distribution is based on filed tariff costs provided all work is performed in accordance with National Grid specifications and schedules. This option may be discussed with the Business Lead upon initial contact. Also see Appendix B of this manual for further information.

Note:

National Grid has developed a program (RUD Fast Track) to streamline the installation for combination natural gas and electric house services in new residential underground sub-divisions. To initiate this RUD Fast Track process the builder must contact a National Grid Representative at 1-877-MyNGridF.

4.3.3. For RUD and CIPUD jobs involving gas and electric, builders and land developers are advised to contact **1-877-MyNGrid** to initiate gas service according to Section 4.2.1 of this book. Advise the Telerep that the job is RUD or CIPUD. A Business Lead will be assigned and the contractor will be given further instructions on the RUD/CIPUD process, including the following:

- Builder or land developer performance payments
- National Grid scope of work and other associated charges
- National Grid Energy's Integrated Project Schedule
- Trenching considerations
- Joint Parity Agreement with the telecommunications utility, if applicable to the contractor

4.3.4 The builder of a subdivision must pay National Grid Energy, in advance of construction, a nonrefundable charge for any main or service footage required in excess of the gas allowances. The allowances provide up to 100 feet of gas main and up to 100 feet of gas service line for each residential heating customer. This is based on National Grid Energy's currently filed Tariff PSC No. 4, Gas, and is subject to change. Should additional lengths of main and service be required, National Grid may justify waiving these excess footage costs by performing an analysis of the customer's adjusted gas revenues.

4.3.5 Gas refundable charges may be allowed. The gas refundable charge will be equal to the total of National Grid Energy's free gas allowance portion of the installation. This charge will be refundable in whole or in part upon commencement of gas service. In lieu of the gas refundable charge, to cover the costs of such installation, National Grid may offer the builder the option of entering into a Gas Waiver Agreement with National Grid Energy. This arrangement provides for National Grid to waive the requirement for the advance gas refundable charges. In consideration of such waiver, the builder agrees that if buyers of fewer than 90% of the homes choose full gas service for space heating, the builder will pay National Grid a percentage of the refundable charge for each home without gas heating service.

4.3.6 Table 4.1 lists RUD/CIPUD Milestones for builders' and land developers' information.

TABLE 4.1
RUD/CIPUD PRE-CONSTRUCTION MILESTONES

DESCRIPTION
National Grid Business Lead/Builder contact established
Builder submits Design Package including: Application, site maps and or ACAD Disks, request for easement form, Underground Electric installation form
National Grid completes Preliminary Distribution Facility Design Layout (Redline/Greenline Stage)
National Grid notifies Builder of Payment Schedule
National Grid Energy/Builder agree to Project and Integrated Construction Schedule
Builder signs Gas Waiver Agreement/National Grid receives First Payment (Design Payment)
Land Developer submits 100% payment
National Grid proceeds with Final Design/Permits/Schedule
National Grid Energy/Builder review Final Design/Integrated Schedule
National Grid receives Second Payment (Materials Payment)
National Grid procures Materials and finalizes Easement Agreement
Builder submits Refundable and/or Non-refundable gas payment if the Gas Waiver Agreement is applicable
Builder submits copies of Sales Contracts including Performance Payment schedule and final payment
National Grid sets up Construction Meeting at Job-Site – See Appendix D
National Grid coordinates Construction Activities with Telephone and Cable Companies
National Grid Construction Activities commence

4.3.7 Contractors, builders and land developers are advised to seek additional information and requirements concerning National Grid Energy's construction process by becoming familiar with Appendix B of this book.

4.3.8 Additional information regarding RUD and CIPUD installations may be obtained, by consulting LIPA's Rules and Regulations for Electric Installations, also known as the "Red" Book.

4.3.9 Table 4.2 lists some common causes of design/construction delays in the hope that by identifying them here, contractors, builders and land developers will be able to avoid and minimize construction delays:

TABLE 4.2

CONSTRUCTION DELAYS/REMEDIES

TYPE OF DELAY	REMEDY
Incomplete information from builder	Builder to follow the guidelines as stated in the pre-construction requirements
Awaiting payment of charges	Send payment for all charges associated with the subdivision in accordance with the pre-construction requirements
Design Change	Builder to notify National Grid in advance of any potential project revisions
No street opening permit	Allow National Grid three to four weeks prior to the start of installation of facilities to obtain necessary road opening permits
Proper grade not established	Established grade in the roadway area should be within six inches of final grade to ensure installation of facilities at the proper depth
Property line not clearly marked	Place stakes and/or spray paint property lines at curbs to ensure proper installation of facilities
Prolonged periods of inclement weather	Builder to allow sufficient time in the work schedule for potential weather related delays. National Grid Energy's rules and work methods prohibit the installation of electric/gas facilities under non-emergency conditions during inclement weather.

4.3.10 Table 4.3 is a checklist that the Builder/Land Developer can use to ensure that all requirements necessary for the design and construction of the RUD subdivision have been submitted to National Grid Energy. Use of this list will help to avoid problems identified in Section 4.3.9.

TABLE 4.3
RUD CHECKLIST

	REQUIREMENTS COMPLETED	DATE
1	Submitted completed "Request for LIPA UNDERGROUND ELECTRIC INSTALLATION" form.	
2	Submitted completed "National Grid Gas Request" form, if applicable.	
3	Submitted six copies of an approved subdivision map to National Grid Energy.	
4	Submitted completed "National Grid REQUEST FOR EASEMENT INFORMATION" form.	
5	Submitted payment for additions charges associated with relocation of National Grid facilities, if applicable.	
6	Submitted 10% design payment (builder only).	
7	Submitted the signed Gas Waiver Agreement if applicable.	
8	Submitted 40% material payment (builder only).	
9	Submitted 50% construction payment (builder only).	
10	Submitted 100% payment (land developer only).	
11	Submitted subdivision easement, notarized and signed by the property owner.	
12	Notified National Grid of the installation of curbs and all other proposed underground facilities.	
13	Notified National Grid that a clear unobstructed easement route of right-of-way, graded to within six inches of final grade has been provided.	
14	Submitted a completed Application Card for each home/dwelling unit requiring gas and/or electric service or (one completed application card with a complete listing of all units including lot numbers and street names) along with a completed Temporary Electrical Inspection Certificate and Gas Inspection Certificate, if applicable.	

5.0 **GAS SERVICE LINE(S)**

5.1 GAS SERVICE LINE(S) TO A BUILDING OR OTHER GAS USAGE

5.1.1 National Grid will normally provide only one gas service to a building, unless the need for more than one service is deemed necessary by Gas Technical Lead. Depending on the locality, more than one service to a building may require approval from the local authority. See 5.1.3.

5.1.2 If Gas Technical Lead determines that more than one gas service is required to supply gas to a building, the local codes may require that the structure be built using party walls to isolate each area served by a gas service.

5.1.3 In Long Island, when more than one gas service is installed in a building, a permanent, weather resistant placard shall be prominently placed near each building entrance point to provide accurate information on the number of services to the fire department when isolation of the gas service is required. It is the contractor's responsibility to provide for the installation of, and the customer's responsibility to maintain, the placard.

5.2 LOCATION OF GAS SERVICE LINE(S)/LATERAL(S)

5.2.1 For new construction, National Grid will install gas service piping in areas free of paved driveways or other paved areas. If it becomes necessary to locate a gas service line where it will be under a driveway or walk, the contractor shall not pave the driveway or walk until the gas service line has been installed. Alternately, the customer may opt to install a PVC sleeve a minimum of 18" below grade in the area to be paved through which the gas service can be installed after the paving installation. This should first be discussed with National Grid who will advise the correct size sleeve and location, and obtain approval for the installation.

5.2.2 The contractor shall notify Technical Lead as early as possible of any such paving as indicated in Section 5.3.1.

5.2.3 A **new** gas service line shall not be installed under or through buildings. Where it is deemed prudent to install a gas service under an enclosed porch, or similar areas occupied by people (such as a sidewalk cafe), National Grid shall install the service through a continuous steel sleeve, up to one foot on either side of the enclosure above it (e.g., the porch), and shall seal and vent the sleeve above grade to the atmosphere.

5.2.4 National Grid shall designate the exact location of the meter and service riser.

5.2.5 Any change requested by the customer to the location of an existing service line, if approved by National Grid, ***shall be made at the expense of the customer.*** The customer shall be responsible for hiring a contractor to install gas house line piping, meter header, regulator vent piping and/or interconnections with facilities.

5.3 SERVICE ENTRANCE TO EXISTING BUILDINGS

5.3.1 Where the service enters the building underground through a poured concrete wall, a sleeve for the gas service shall be installed by the builder during construction. Technical Lead shall designate the size and location of the sleeve. For further information, see **National Grid** Construction Standard SERV6215.

5.3.2 Service Entry to Existing Buildings - Where an inside meter location has been selected, the gas service entry point below grade shall be enclosed in a protective pipe sleeve following specification. The boring of the entrance hole, excavation, installing the sleeve and, sealing of the space between the sleeve and gas piping, shall be the responsibility of National Grid.

5.4 CONNECTION POINT OF SERVICE, NATIONAL GRID/CUSTOMER CONNECTION POINT OF GAS SERVICE

5.4.1 The connection point of service (that point in the gas service line where responsibility ends and the customer's responsibility begins) shall be defined **physically** according to the applicable Construction Standard.

5.5 RESTORATION ON PRIVATE PROPERTY

5.5.1 For private property an agreement will be made before work begins on the restoration of the property. The amount of restoration performed by National Grid will be determined on a case by case basis.

5.6 ADDITIONAL METERS OR SERVICES

5.6.1 Contractors and customers are advised that **in NYC, and** some towns and other local jurisdictions require, by law, that they be notified in writing of the addition of any gas meters or new gas services to any property. It is the contractor's responsibility to become aware of these concerns and requirements.

6.0 GAS PRESSURE

6.1 NOMINAL METER OUTLET PRESSURE WHEN SERVED FROM HIGH PRESSURE DISTRIBUTION SYSTEM

6.1.1 On the high pressure portion of its distribution systems, where a service regulator is installed in conjunction with the gas meter, National Grid provides gas to customers at a nominal pressure of **6”** W.C. The nominal pressure is measured immediately downstream of gas meter or service regulator, whichever is further downstream.

6.1.2 **Operating/Running** pressure at the meter or regulator outlet typically can be as high as 7" W.C. or as low as 5" W. C. and can vary slightly for each installation depending on load diversity, pressure drops through the meter set piping, service regulator performance, and pressure drop through the gas meter.

6.1.3 When purchasing gas utilization equipment to operate on gas from high pressure distribution system, it is recommended that equipment be chosen to function effectively based on nominal pressure of 6" W. C. at the outlet of the meter or service regulator, whichever is further downstream.

NOTE

It is policy, whenever practicable, to deliver the minimum meter outlet pressure to meet the requirements of the customer’s gas utilization equipment to ensure safe, efficient operation of all properly adjusted appliances. In all cases, National Grid has the sole responsibility for the determination of which gas distribution system, low pressure or high pressure, will supply the approved load and what gas pressure can be supplied.

6.2 METER OUTLET PRESSURE WHEN SERVED FROM NATIONAL GRID LOW PRESSURE DISTRIBUTION SYSTEM

6.2.1 On the low pressure portion of its distribution systems, where no service regulator is installed, National Grid provides gas to customers at the front wall (point of entry) of pressure that can vary between 4" and 9.5" W. C. When purchasing gas utilization equipment to operate on gas from low pressure distribution system, it is recommended that the equipment be chosen which requires no more than 3.5 W.C. pressure at the burner.

6.3 PRESSURE AND CONTRACTOR

6.3.1 The contractor shall ensure that the customer's house line and all associated interconnecting piping into system are properly sized to prevent excessive pressure losses at the gas utilization equipment. The contractor must also ensure that the customer's installed gas utilization equipment is compatible with available nominal gas pressure. Contractors are advised that the gas pressure available at the inlet of the manufacturer's burner gas train (before the appliance regulator) will be equal to the pressure at the gas meter outlet MINUS the pressure drop in the customer owned gas piping system.

6.4 ELEVATED METER OUTLET PRESSURE ON HIGH PRESSURE DISTRIBUTION SYSTEM

6.4.1 In certain instances, such as with industrial processing or commercial equipment, there may be a need for gas pressure higher than nominal 6" W.C. at the meter outlet.
Elevated pressures are not available throughout the entire service territory, thus all requests for elevated pressure must be approved in advance by the National Grid Project Manager or by Gas Sales and Marketing.

6.4.2 If elevated pressure is requested, National Grid will normally supply gas pressures of 1/2 PSIG or more in increments of 1/2 PSIG for commercial and industrial customers. National Grid will supply elevated pressure to a customer on a case by case basis. Please note that special permission may be required from local authority having jurisdiction in certain situations. Fixed factor metering can be used to meter ½ psig installations when a diaphragm meter is used and up to 1 psig on a rotary meter. These meter sets will utilize threaded piping and fittings. When a pressures greater than 1 psig is required and low flow conditions require metering at that pressure (rather than line pressure), these meter sets MUST be welded by National Grid at the Customer’s expense.

6.4.3 If the customer needs elevated pressure because of gas utilization equipment requirements, the customer or customer's contractor shall provide the appropriate information in writing to support the elevated pressure request. This information shall be submitted to National Grid as soon as possible for evaluation and approval.

6.4.4 Along with the customer's application, the customer shall provide National Grid with the manufacturer's specifications for the gas utilization equipment. The literature furnished shall provide an explanation of the need for elevated gas pressure requirements. Upon verification of the equipment pressure

requirement, if the above acceptance criteria are met and the National Grid gas system at the location can supply the elevated pressure, National Grid will furnish gas to accommodate the higher pressure need.

6.4.5 The customer shall be responsible to pay for any additional costs associated with the meter set when the construction estimate does not pass revenue test.

6.4.6 The minimum design pressure in high pressure distribution system varies depending on differing loads and weather conditions, as well as normal periodic maintenance within system. These factors can cause occasional periods of low gas pressure in the customer's houseline. Therefore, it is policy to supply gas at the meter outlet or regulator of a value no greater than the ***minimum*** pressure of high pressure gas main serving that area.

NOTE

Customers, Owners and/or Contractors shall contact National Grid if they are planning to make any additions or modifications to a gas piping system so that National Grid may provide a safety review of your plans.

6.4.7 Under certain conditions where the customer's load requirements and gas utilization equipment qualify, National Grid will discuss with the customer the availability of supplying line pressure where there is no service regulator at the meter header. In these cases, the customer is advised that the gas pressure would vary nominally with any variations in high pressure gas distribution system.

6.5 ELEVATED METER OUTLET PRESSURE ON LOW PRESSURE DISTRIBUTION SYSTEM

6.5.1 In certain geographical locations, only low pressure gas is available via gas distribution system. In these areas, if elevated meter outlet pressure is required, a gas booster may be necessary. Contact the Project Manager for details.

6.6 LOCAL CODES RELATING TO ELEVATED GAS PRESSURES

6.6.1 When gas pressure greater than the nominal 6” W.C. is required, the code requirements of the prevailing jurisdiction shall also be met along with requirements. Contractors shall be familiar with these codes and obtain any necessary approvals from regulating agencies before submitting the application to National Grid.

7.0 METERS AND REGULATORS

7.1 PREREQUISITES AND NOTIFICATIONS FOR NEW GAS METERS

7.1.1 At least one gas appliance, properly installed and connected to the gas piping system, is required as a prerequisite before National Grid will install a new meter and turn on the gas supply to the customer.

7.1.2 For all large commercial, industrial or multiple meter header installations, a construction meeting with Gas **Project Manager** ***is required*** as early as possible in the job process, but in all cases prior to commencement of work. The

contractor shall contact **Project Manager** to schedule this meeting. The purpose of this meeting is to:

- Review construction schedule and to fix commitment dates.
- Review the service installation construction requirements.
- Review meter header location site and meter set construction specifications
- Review inspection requirements.
- Provide the contractor with National Grid supplied construction items.
- If applicable, review TC2005 Requirements for Installation of Automatic Dual Fuel Burners and Equipment at Temperature Controlled (TC) Sites and Straight Gas Utilization Equipment of 400,000 Btu/hr and Higher (Blue Book Part 2 of this book).

7.2. METER SET LOCATION REQUIREMENTS

7.2.1 All meter sets shall be located on the outside of any building unless it is impractical or unsafe.

7.2.2 All meter sets shall be installed following the clearance requirements indicated in **the appropriate Construction Standard. For information on distances of electric meters from gas meters, refer to SERV-6225.**

7.2.3 Outside and inside gas shut-off valves shall be readily accessible at all times to National Grid and emergency service personnel and shall not be covered or obstructed.

7.2.4 The installation of meter sets in driveways, under windows, under building overhangs or near fresh air intakes ***should be avoided*** where practical. In those cases where the regulator vent cannot be located to meet clearance requirements, the contractor shall be responsible for installing regulator vent piping according to SERV-6225.

7.2.5 Meter set locations shall be sufficiently removed or separated from the bottom termination of a stairway so as not to constitute a hazard. When required distances cannot be maintained, such as for buildings with limited width, the contractor shall be required to provide suitable protection.

7.2.6 Outdoor and indoor meter set locations that may be exposed to vehicular or other equipment damage shall be avoided unless no other feasible location exists. If one or more of the criteria in Section 7.7 of this book are met, protection posts shall be required. National Grid, or the contractor installing the service shall provide protection posts protecting the service at the time the riser is installed. The customer will supply and install all protection posts to protect all piping downstream of the riser. Protection posts are in be installed per **National Grid** Construction Standard MTRS6060.

7.2.7 Meter sets shall not be installed below ground in **vaults**

7.2.8 The metering of large quantities of gas or the installation of meter sets and regulators in schools, commercial buildings or industrial buildings, including multiple meter headers, may require meter rooms, or special construction or piping. Consultants and installers of such facilities are advised to consult with Gas **Project Manager** to discuss what to expect regarding role and their own role in preparing for the upcoming installation.

7.2.9 Although it is not desirable and should be avoided, gas meters may be placed under windows provided that the following conditions are met: **See SERV6215 AND SERV6225.**

- No other suitable location is available
- Proper regulator venting is provided

7.3 INSTALLATION AND INTERCONNECTION REQUIREMENT

7.3.1 The meter header shall be installed according to the **National Grid** construction standard. The most commonly used construction standards will be included at a future date.

NOTE

To avoid delays and possible repeat visits to the site, it is critical that the contractor adhere to the space dimensions specified between meter connections. Consult the appropriate Construction Standard for these dimensions prior to the start of construction.

7.3.2 **FOR NYC**:
The fabrication of meter headers on both commercial establishments will be the responsibility of the contractor regardless of customer's downstream utilization pressure. National Grid will be responsible to supply the plumber or contractor with the materials detailed in National Grid Construction Standards. A review of the material list in the Construction Standards will indicate the items supplied by National Grid and those to be purchased by the Plumber/Contractor. The contractor will be responsible to supply the labor to fabricate the meter header on site.

FOR LONG ISLAND:
The fabrication of meter headers is as follows:
For gas headers requiring 1 psig or less, it will be the responsibility of the Contractor to pipe up the header using screw fittings (Welded headers are not permitted). For headers requiring above 1 psig delivery pressure, the gas header will be welded and installed by National Grid at the cost to the Contractor or customer. Pricing will be determined by the size of the gas header.

7.3.3 National Grid will supply and install, at the time of meter installation, the meter swivels, nuts, bolts, and gaskets required to connect the meter to the meter header.

7.3.4 In those cases where National Grid installs the meter header, the contractor shall be responsible for houseline interconnections with facilities and the installation of the regulator vent and/or relief valve vent piping. Houseline interconnection to the meter set and the installation of service regulator or relief valve venting shall be performed according to National Grid specifications as provided in the appropriate **National Grid** construction standard(s).

7.3.5 Contractors are advised that all of the **National Grid** Construction Standards contain a Bill of Material and a Notes section identifying the responsibilities for furnishing various components as well as other specific requirements. Dimensions shown on the drawings shall be maintained, unless a unique installation problem develops. Exceptions to the approved construction standards shall be reviewed and approved through National Grid before the start of construction.

7.3.6 In certain installations, usually for horizontal meter headers or very large volume customers where standard construction drawings do not exist, the meter header will be custom designed by National Grid. Site specific drawings will be furnished for that particular installation through **Project Manager.**

7.3.7 Piping and fittings used on outside meter sets shall be galvanized iron, welded and painted steel pipe, <u>or</u> screwed and painted black pipe. See Section 8.0 of this book for piping requirements regarding materials, coatings and construction. Galvanized is the preferred method in Long Island and also may be required by certain municipalities.

7.3.8 The customer's pipe connecting to the meter header shall be installed and supported following the **National Grid** Construction Standards, NFPA 54 FGCNYS and/or NYCFGC requirements, and the requirements identified in Section 8.0 of this book.

7.3.9 Prior to requesting a meter installation, the contractor shall be responsible for the installation of plugs or caps on any open ended pipe or fittings on the meter header or customer house line to prevent entry of dirt and debris ensuring the integrity of the gas piping system.

7.4. <u>INDOOR METER SET REQUIREMENTS</u>

7.4.1 Meter sets shall be approved for indoor installation only when, in judgement, an outdoor installation is impractical or unsafe.

7.4.2 Indoor meters shall be installed according to the **National Grid** Construction Standards and written specifications provided by **National Grid. For information on distances from gas and electric meters, refer to National Grid Drawing SERV-6215.**

NOTE

In cases where the service regulator must be installed inside the building, the service regulator and meter shall be located immediately downstream of the exposed service line valve.

7.5 INDOOR METER SET REQUIREMENTS FOR LARGE INSTALLATIONS

7.5.1 For Buildings of Public Assembly, apartment buildings, or for construction within an apartment, industrial or commercial complex, each with a capacity of seventy-five or more persons, the following specifications shall apply when meters/regulators are installed indoors:

- Where practicable, the regulator, valves and other gas equipment shall be installed within a separate room that is designed for two-hour fire resistance and effectively sealed from the remaining space in the building. These meter rooms shall also meet all code requirements.

- The customer shall post a notice prohibiting unauthorized persons from entering the meter room to prevent tampering. A conspicuous and permanent notice shall be posted on doors or access leading to the specific installation indicating the actions to be taken, and the telephone number of the proper person to be called, in the event a gas odor is detected. The lettering shall be of bold type, at least one inch in height, properly spaced to provide good legibility and contrast with background.

- Gas meter rooms shall be properly ventilated, lighted, and kept free of trash and rubbish at all times. Outside air for ventilation of a meter room shall be furnished as a separate supply, and shall not be shared with any other room.

- Meter rooms shall ***not*** be used for storage purposes, including building materials or equipment.

- Meter rooms shall ***not*** be used in the volume calculation in determining the combustion and ventilation air available for gas utilization equipment.

7.5.2 For multifamily dwellings in New York City, gas meters shall not be located in the following places:

- A boiler room (other than a replacement of an existing gas meter) or other room or space containing a heating boiler;

- Any stair well;

- Any public hall above the basement or above the lowest story if there is no basement;

7.5.3 For a retrofit or expansion in a multifamily dwelling in New York City, where a gas meter is already installed in a boiler room, one addition gas meter may be installed provided the additional meter is:

- Installed adjacent to the existing gas meter;

- Is used in conjunction with the supply of gas for a gas fired heating boiler or a gas fired water heater used as a central source of supply heat or hot water for tenants.

7.6 MULTIPLE METER HEADER REQUIREMENT

7.6.1 Gas meters, along with associated customer owned piping at multiple meter locations, shall be plainly identified by the installing contractor using a metal tag or other permanent means. These **markings** shall clearly identify the building or part of the building being supplied by the piping on each meter, according to Construction Standard MTRS6215. These **markings** shall be completed by ***the*** contractor before National Grid will install the gas meter and turn on the gas supply.

7.6.2 The meter header piping shall be adequately sized and shall be properly supported according to the **National Grid** Construction Standard identified and furnished to the contractor.

NOTE

Contractors are advised to ensure that the following additional information is known and approved by National Grid prior to the start of the meter set construction:

1. *Piping manifold size*
2. *Number and size of meters*
3. *Meter by-pass requirements*
4. *Specific* National Grid *Construction Standard*

7.7 METER SET PROTECTION REQUIREMENT

7.7.1 When a customer cannot provide either an indoor or outdoor location for meters, regulators and associated piping that is free from the possibility of vehicular, equipment or other physical damage, the Customer will provide protection posts according to **National Grid** Construction Standard MTRS6060. The Customer is responsible for the installation of these posts. Such instances include locations near vehicles, or materials in motion, driveways, parking areas, storage rooms, or other similar situations. National Grid will not install the meter until this requirement is completed. National Grid will install any posts required to protect the gas riser.

7.7.2 In areas where vandalism might be anticipated, a protected meter area may be required, or meters may need to be protected by a suitable wire fence if specified by National Grid. Specified protection shall be installed according to the **National Grid** Construction Standard MTRS6525.

7.7.3 It is position that, when the specifications established in **National Grid** Construction Standard MTRS6060 are not followed, National Grid will not set the new meter until adequate protection is provided.

7.8 METER HEADER PAD REQUIREMENTS FOR LARGE GAS INSTALLATIONS

7.8.1 The customer shall be responsible for the installation of a concrete gas meter pad for all rotary and turbine meter installations where a meter pad is required.

Meter pads are required to support the weight of the meter and its associated gas header piping, valves and in some cases the weight of gas house line interconnection piping.

7.9 WALLS TO SUPPORT METER HEADER REQUIREMENTS

7.9.1 Vertical headers such as Construction Standard MTRS6465, do not require a wall to support the piping, meter, and regulator.

7.9.2 In cases where **National Grid** Construction Standards shows meter set piping supported by a wall, a wall shall be constructed to support the meter set if one does not already exist. In some cases, where a wall does not exist, a horizontal meter set may be specified instead if space requirements are adequate.

7.10 RELOCATION OF GAS METER SETS

7.10.1 Gas meter relocation, such as moving a meter from one outdoor location to another outdoor location, or from an inside location to an outdoor location, shall be performed at the customer's expense. It is National Grid policy to avoid moving any inside meter to another inside location, or an outside location to an inside location unless no other feasible location can be reasonably found.

7.10.2 To request meter relocation, contact National Grid for Long Island at **1-516 545-4943, *or* 718-643-4050** for NY City. ***A representativ*e** will schedule a field visit by National Grid who oversees the design, policy requirements, field measurements and scheduling.

7.10.3 Contractors performing the relocation of the customer owned-piping shall be responsible for:

- Interconnection of piping with the National Grid piping at the connection point of service
- Fabricate new meter header
- Providing proper meter header protection, if needed;
- Obtaining necessary piping permits from local authorities.

7.11 GAS SERVICE REGULATOR AND VENTING REQUIREMENTS

7.11.1 National Grid will select, furnish, install and adjust all service regulators when the gas is supplied by high pressure gas distribution system. All questions related to regulator and relief valve set points shall be referred to National Grid

7.11.2 All service regulator vent piping and related components shall be installed according to NFPA-54, FGCNYS or the NYCFGC. Contractors shall be responsible for piping the regulator vent.

7.11.3 OUTSIDE METER SETS:
Service regulator vent piping shall be sized according to Appendix A of this book. On all large jobs the contractor shall not size or determine the termination

locations of regulator and relief valve vents without the assistance of National Grid's Project Manager or Gas Technician.

7.11.4 INDOOR METER SETS:
All service regulators and relief valves installed indoors shall have the vent piped to the outdoors by the contractor. All regulator vent installations shall be in compliance with the **National Grid** Construction Standard Number SERV6225. **National Grid** Construction Standards and other unique requirements applicable to a particular installation shall be strictly followed by the contractor.

7.11.5 All vent lines on indoor or outdoor installations shall have an insulating **fitting** installed as close to the service regulator or relief valve as practical.

7.11.6 All vent lines on indoor or outdoor installations shall be equipped with an approved insect and rain resistant cap on the terminal end.

7.11.7 Service regulator vents shall not be covered over, plugged up, or otherwise obstructed.

7.11.8 Termination locations of regulator or relief valve vents shall be protected from damage caused by submergence in areas where flooding or ice accumulation may occur. National Grid will advise the contractor of vent terminus requirements for all locations that deviate from established requirements in the construction standards. In areas where frequent flooding occurs, the vent **shall** terminate above the high-water mark.

7.11.9 The lengths of vent run and number of fittings shall be kept to a minimum. It will be necessary to increase the pipe size of the vent piping when long runs cannot be avoided. Appendix A shall be consulted to decide appropriate vent sizes and other information on service regulator venting.

7.12 METER BYPASS REQUIREMENTS

7.12.1 National Grid will specify a meter bypass piping arrangement as part of the appropriate construction standard design. (This applied to Long Island & The Rockaways Only)

7.13 TELEMETERING INSTALLATION REQUIREMENTS

7.13.1 Customers with TC & Interruptible service shall be remotely monitored using telemetering equipment. This requirement may result in additional cost to the customer.

7.13.2 The customer shall be responsible for the installation of a dedicated, voice-grade telephone line routed to a location designated by Gas **Project Manager,** terminating with an appropriate network interface. (This applies to Long Island and the Rockaways only)

7.13.3 The customer shall be responsible for any trenching, drilling, conduits, restoration, supports, etc. that may be required to reach the National Grid telemetering device.

7.13.4 National Grid will install the interconnecting cable between the customer-provided interface and the telemetering device.

7.14 METER INSTALLATION, PURGING AND RELIGHTING

7.14.1 For commercial, industrial and multi-meter installations that add loads requiring increased meter or regulator size where National Grid is required to shut down the existing gas service, the contractor may be required to purge air from the system upon reconnection, and to relight all gas utilization equipment affected **by the shutdown**.

7.14.2 For all commercial new meter sets, the installing contractor shall be responsible for purging the house line and for starting up the equipment.

7.14.3 For residential new meter sets, National Grid will purge the gas piping system and light all operating gas appliances at the time of the new meter set. Appliances that are not ready for operation at the time of the meter set shall be started up by the installing contractor.

7.14.4 Where the gas service is turned off for Company purposes, National Grid will be responsible for the turning off all affected appliances, performing an integrity test of the gas piping system prior to the turning on and gassing in, and relighting all affected appliances.

7.14.5 For new meter sets serving large input gas utilization equipment, the burner installer shall be responsible for purging **as per NFPA 54,** FGCNYS or the NYCFGC **instructions.**

7.15 PILOT GAS SUPPLY FOR INTERRUPTIBLE RATE CUSTOMERS

7.15.1 TC & Interruptible customers who do not have an existing firm rate meter supplying a gas pilot may not be required to have a separate firm rate meter for the purpose of supplying the pilot as long as National Grid determines that installing a separate pilot gas supply line is impractical. The pilot gas supply may be taken off the interruptible gas meter supply line.

7.15.2 For new installations requiring a separate gas pilot supply line, the pilot gas supply shall be supplied by a low-pressure firm rate gas meter.

8.0 CUSTOMER-OWNED GAS PIPING SYSTEMS

8.1 GENERAL

8.1.1 Before proceeding with the design and installation of gas piping systems, contractors are advised to refer to the National Fuel Gas Code (NFPA 54), FGCNYS or the NYCFGC. It is strongly recommended that a review of the local plumbing requirements also be performed to ensure that the proposed installation is in compliance with local codes.

8.1.2 When a new appliance or other gas load is added to an existing gas piping system, the contractor/customer shall verify the capacity of the existing piping for adequacy according to the capacity table(s) in NFPA 54, FGCNYS or the NYCFGC or equivalent. If necessary, existing gas piping shall be replaced with larger piping or additional piping installed that also conforms to the NFPA 54, FGCNYS or NYCFGC capacity tables.

8.1.3 The customer shall not be permitted to use an abandoned service line as a houseline.

8.1.4 For Long Island installations, the licensed plumber is required to self certify the installation's integrity by completing the form in Appendix F (This self certification form only applies to Towns without plumbing inspectors). This completed form, along with diagram of any buried piping, will be required at the site prior to the installation of the gas meter by National Grid personnel. It is the Contractor responsibility to install customer owned piping to all National Grid's requirements and to Federal, State and local Codes. Failure to comply with these Codes, may delay the gassing in on the installation. For commercial installations with Class 800 meters and larger, National Grid shall witness the pressure test in those towns without plumbing inspectors.

8.1.5 For customer-owned gas piping installations ***that meet the definition of a gas service,*** the contractor shall perform an acceptance test to verify the condition of the cathodic protection measures installed, where the type of piping warrants such protection. This test, which shall be performed after installation of the pipe and prior to setting of the meter, only indicates the condition of the cathodic protection at the time of testing. Any corrective action required by virtue of the test results shall be the contractor's responsibility. National Grid reserves the right to perform a cathodic protection acceptance test on any given installation.

8.1.6 Gas Pipe Bonding: "Each above ground portion of a gas piping system that is likely to become energized shall be electrically continuous and bonded to an effective ground fault current path. Gas piping shall be considered to be bonded where it is connected to gas utilization equipment that is connected to the equipment grounding conductor of the current supplying that equipment".

8.2 PIPE SIZING

8.2.1 All gas piping, including trunk and branch lines, shall be adequately sized according to the National Fuel Gas Code (NFPA 54), NYCFGC or the NYCFGC. Gas Ranges shall have a minimum pipe size of ¾" nominal size.

8.2.2 ***It is policy to standardize on the use of NFPA 54,*** FGCNYS **or the NYCFGC** when offering technical assistance for sizing gas pipe operating at pressures less ***than 1*** psig.

8.2.3 The allowable pressure drop in house piping where gas ***is supplied by low pressure gas distribution system***, as measured from the meter outlet to the inlet of the gas appliance, under maximum expected flow conditions ***shall not exceed requirement in NFPA 54 FGCNYS or the NYCFGC.***

8.2.4 For sizing a houseline, whether it is connected to a National Grid high pressure or low pressure main, contractors are advised that the length of house piping to be used in sizing the pipe shall be measured ***from the connection point of service*** to the desired usage point.

8.2.5 A diversity factor shall be used to determine the maximum gas consumption for commercial and industrial establishments and in multiple tenant buildings where several appliances or loads are supplied from a common gas pipe line. In these cases, using a diversity factor in sizing the piping can result in significant savings in houseline and meter header costs. These factors can involve some complexity. For example, surveys have shown that different usages affect the load patterns where ranges are used, but range usage does not affect heating load patterns.

8.2.6 For many typical cases (such as the standard residential combination of a boiler, a water heater and a range), a valid indication of whether the house piping system is sized properly is a series of pressure measurements taken immediately upstream of each appliance with ***all*** appliances operating. ***If each appliance delivers its rated input, and the minimum inlet pressure required by the manufacturer is maintained, this piping will be accepted by the National Grid*** **representative.**

For multiple appliance or load situations, such as apartment buildings or industrial complexes with many different loads, this criterion will not hold true because of the effect of diversity factors.

8.3 PIPING DRAWING

8.3.1 For buried customer-owned piping installations, where the supply line is defined as a service, such as a remote meter location, it is mandatory that a piping drawing or plan be provided to National Grid's Project Manager for review and approval prior to starting work on a job. This drawing shall indicate the proposed location, sizes of each branch, the various loads, connection point or service, cathodic protection measures, piping material and joining methods. It is especially important that the piping location information provided be accurate. At the end of the job, an as-built version of this drawing shall be submitted to National Grid prior to acceptance of the job.

8.4 GAS PIPING MATERIALS

8.4.1 GENERAL

Materials used for gas piping shall be selected according to the provisions of NFPA 54, FGCNYS or the NYCFGC, local codes and the requirements listed in the following sections.

8.4.2 GAS PIPING MATERIALS, INDOORS

For indoor gas piping, materials used shall be one or a combination of the following, complying with the latest ANSI standards for wrought iron or steel pipe, ANSI B36.10:

- Bare steel or wrought iron, of standard weight (Schedule 40) with screwed or welded joints. ASTM A53 continuous weld pipe shall be used as a minimum.

- Galvanized pipe, of standard weight (Schedule 40), ASTM A53, with screwed joints.

- Threaded gas fittings for steel or wrought iron pipe shall be 150 pound, malleable iron, forged steel, black iron or galvanized steel.

- Copper tubing with brazed or flared joints. ***When copper is used, a minimum wall thickness shall be used as specified for type "K" or "L" pipe according to ASTM B88.*** **(Except in NYC service territory).**

- **Plastic** pipe of any type is **prohibited** for indoor use.

- **Cast iron** pipe is **not permitted** under any circumstances.

- **Corrugated Stainless Steel Tubing**: For natural gas piping inside and outside buildings, a recently developed system of piping Corrugated Stainless Steel Tubing (CSST) has been recognized by the National Fuel Gas Code since 1988, and is becoming more popular outside service territory. This technology provides another option for gas piping in addition to steel or copper pipe. It is to be used where permitted by local codes. **(Currently prohibited in NYC). See Appendix F for CSST piping in all other areas of New York State**

NOTE

Contractors are advised to exercise extreme caution when choosing to use CSST on an installation since some jurisdictions may not yet have approved this piping option. Contractors and builders interested in learning more about this economically favorable alternative are strongly encouraged to review the relevant sections in NFPA-54, **FGCNYS or the NYCFGC.**

8.4.3 GAS PIPING MATERIALS, OUTDOORS, ABOVE GROUND

- For piping outdoors, above ground, including regulator vent piping, galvanized pipe, **properly coated black iron pipe** with screwed joints shall be used, unless welded joints are required. If steel pipe with welded joints is required, ASTM A53 continuous weld pipe shall be used as a minimum, but ASTM A106 is recommended. Where permitted, plain steel pipe may be used with screwed ends. In this case, the minimum material selected shall be ASTM A53 continuous weld pipe as well.

- ***Cast iron pipe*** *is* not permitted under any circumstances.

8.4.4 GAS PIPING MATERIALS, BELOW GROUND, GENERAL

For buried customer-owned gas piping applications, only three materials, properly installed according to the specifications in the **book,** are acceptable These materials are:

- Coated steel pipe with a cathodic protection system to prevent corrosion. Steel pipe construction may be either welded or threaded. See Section 8.4.5 for details.

- Polyethylene (PE) plastic piping. Plastic piping is the material of choice for gas utilities because it is low in cost, easy to handle and install, and in noncorrosive underground. See Section 8.4.6 for details.

- Copper tubing with brazed or flared joints for ***only certain specific small load applications only,*** such as gas grills and gas lights. See Section 8.4.7 for details. **(Exception of NYC service territory).**

- ***Cast iron pipe is*** not permitted under any circumstances.

8.4.5 GAS PIPING, BELOW GROUND, STEEL PIPE OPTION

- Steel pipe shall meet the requirements of ASTM A106 or API 1104, with a minimum of schedule 40 wall thickness. This piping is commercially available with factory-applied protective coatings for buried applications (mill wrapped). Piping may be installed either by welding or by use of field threading techniques and threaded couplings. All bare sections of piping and fittings, welded or threaded, shall be field coated and wrapped according to the coating and wrapping techniques of Section 8.10 of this book.

  In addition, a cathodically protected system shall be required for steel pipe installed below ground to be fully effective in preventing corrosion.

  Uncoated steel pipe and uncoated portions of steel pipe where welded or threaded joints have been made shall not be permitted below ground.

  Installation requirements and details for steel piping installed below ground are provided in Sections 8.10 through 8.11.

8.4.6 GAS PIPING BELOW GROUND, PLASTIC PIPE OPTION

Polyethylene (PE) pipe or tubing PE 2406 (medium density yellow) or PE 3408 (high density black) conforming to ASTM D2513, Specifications for Thermoplastic Gas Pressure Pipe Systems, shall be used.

PE plastic pipe may ***not*** be used for gas piping inside or beneath buildings, or for venting gas pressure regulators.

The following specifications shall be used for PE fittings:

- ASTM D2683 Specification for Socket Type Polyethylene Fittings for Outside Diameter Controlled PE Pipe and Tubing

- ASTM D3261 Specification for Butt Fusion Polyethylene (PE) Plastic Fittings for Polyethylene (PE) Plastic Pipe and Tubing

- ASTM F1055 Standard Specification for Electrofusion Type PE Fittings for Outside Diameter Controlled PE Pipe and Tubing

NOTE:
All PE pipe, tubing and fittings are normally marked by the manufacturers with the appropriate ASTM code-indicating conformance to the specified standards.

Installation requirements and details for plastic piping are provided in Section 8.12

TABLE 8.1

PLASTIC PIPE SDR RATINGS AND WALL THICKNESSES

SIZE	SDR RATING	WALL THICKNESS
½”CTS	SDR 7	.090”
1” CTS	SDR 11.5	.099”
1 ¼”	SDR 10	.166”
2”	SDR 11	.216”

8.4.7 GAS PIPING BELOW GROUND, COPPER TUBING OPTION

Minimum wall thickness when using copper shall be as specified for type "K" or "L" tubing, according to ASTM B88, soft copper.

- Fittings for copper tubing shall be wrought copper. Cast fittings are not permitted. See Section 8.13 for copper installations.

NOTE
Copper tubing shall not be used above or below ground from the meter outlet to the building foundation, such as from remote meter pad locations, under the building foundation, or through the building wall. **Installation requirements and details for copper tubing** ***installed below ground are provided in Section 8.13.***

8.5 VALVES

8.5.1 Listed, design-certified manual shut-off valves shall be used as main shut-offs for gas appliance installations according to the requirements in NFPA-54, FGCNYS, or the NYCFGC **and local codes**.

CAUTION

NEVER - FOR ANY REASON - remove the core nut from a gas valve, or attempt to disassemble a valve stem when the gas pressure is on.

8.6 STEEL GAS PIPING, WELDING REQUIREMENTS

8.6.1 GENERAL

When welded construction is used, above or below ground, indoors or outdoors, welders shall be certified by recognized certification and testing agencies for pipeline welding in accordance with API 1104 or ASME Section IX. Written welding procedures shall be followed to ensure the acceptability of field welds. Welders' certifications shall be available at the construction site.

8.6.2 RESIDENTIAL, COMMERCIAL, INDUSTRIAL, MULTI-FAMILY INSTALLATIONS IN NEW YORK CITY, NASSAU AND SUFFOLK COUNTIES

IN LONG ISLAND:

The maximum design/operating pressure for gas piping systems located inside buildings shall not exceed ***5 psig*** unless: 1. Approved by National Grid. 2. The piping system is welded ***and one or more*** of the following ***conditions*** are met:

- The piping is located in a ventilated chase or otherwise enclosed for protection against accidental gas accumulation.
- The piping is located inside buildings or separate areas of buildings used exclusively for:
- Industrial processing or heating,
- Research,
- Warehousing, or
- Boiler or mechanical equipment rooms.

IN NEW YORK CITY:

No gas distribution piping containing gas at a pressure in excess of 1/2 psig shall be run within a building, except that pressure not exceeding three psig is permitted for the following uses: (a) commercial use, (b) industrial use; (c) other large volume use in which fuel requirements for boiler room equipment exceed 4000 cubic feet per hour and such large volume use is supplied through separate gas distribution piping to the boiler room. Gas pressure not exceeding 15 psig is permitted for boiler room equipment in excess of 100,000 cubic feet per hour provided the gas distribution piping is installed as provided for in Section P115.8 of the New York City Building Codes. The use of pressure in excess of 15 psig shall be permitted for distribution piping provided all of the requirements of Section P115.8 are met.

All requirements for installation of gas distribution piping with pressure above 1/2 psig shall be in accordance with Z223.1 Part II National Fuel Gas Code. Gas distribution piping operating at a pressure of over 1/2 psig to 3 psig and of a size 4 inches or larger shall be welded. All gas distribution piping operating at a pressure above 3 psig shall be welded and radiographed per API-1104 or ASME Section IX. All welding of gas distribution piping shall be subject to controlled inspection as set forth in section C26-103.3.

Threaded piping may be used up to 4 inches in size at pressures no greater than ½ psi.

8.6.3 ALL PUBLIC AND PRIVATE SCHOOL BUILDINGS, INCLUDING COLLEGES

All steel gas piping 3" and larger in size, regardless of operating pressure, shall be welded.

8.6.4 TESTING REQUIREMENTS OF PIPING **AFTER THE METER**

TABLE 8.2

PRESSURE TEST REQUIREMENTS

OPERATING PRESSURE (FOR PLASTIC /GALVANIZED OR BARE STEEL PIPE	**TEST PRESSURE AND DURATION**	
	NEW YORK	**LONG ISLAND**
LP to 14" W.C.	3 PSIG / 30 MINUTES	3 PSIG / 30 MINUTES
> 14" W.C. - 3 PSIG	50 PSIG / 30 MINUTES	-------
> 14" W.C. - 5 PSIG	-------	50 PSIG / 30 MINUTES
> 3 PSIG – 15 PSIG	100 PSIG / 1 HOUR	
> 5 PSIG – 15 PSIG	-------	100 PSIG / 1 HOUR
>15 PSIG – 125 PSIG	2X MAOP, BUT NOT LESS THAN 100 PSIG / 1 HOUR	2X MAOP, BUT NOT LESS THAN 100 PSIG / 1 HOUR

OPERATING PRESSURE ANY STEEL PIPE THAT IS PAINTED, COATED OR WRAPPED (ABOVE GROUND OR BELOW GROUND)	**TEST PRESSURE AND DURATION**	
	NEW YORK	**LONG ISLAND**
LP – 60 PSIG	90 PSIG LESS THAN 2" DIA. – 1 HOUR 2"-12" DIAMETER – 4 HOURS	90 PSIG LESS THAN 2" DIA. – 1 HOUR 2"-12" DIAMETER – 4 HOURS

8.6.5 STANDARDS FOR NON_MERCURY GAUGE

The rules in this section establish the minimum standards for non-mercury gauges to test gas piping, drainage and vent systems.

Minimum requirements – Each gauge shall meet the following requirements:

a) The gauge shall be manufactured and used in accordance with the ASMEB40.100-1998 Standard for Pressure Gauges and Gauge Attachments, which incorporates ASME B40.1-1998 and ASME B40.7-1998, and the manufacturer shall provide with the gauge a written statement that the gauge is manufactured in accordance with such ASME standard;

b) The gauge shall be labeled with the name of the manufacturer;

c) The gauge shall be kept in a padded separate rigid box and the manufacturer's instructions for use and protection of the gauge shall be complied with,

d) The units of measurement "psi" shall appear on the face of the gauge;

and

e) The gauge shall be kept in good working order.

8.6.6 WELDER QUALIFICATIONS

a) Welders's qualifications. Welders installing gas piping within buildings at any pressure shall be qualified for all pipe sizes, wall thicknesses and all positions in accordance with either API 1104-1977, 14th edition, or ASME Section IX Boiler and Pressure Vessel Code, 1980 and re-qualified on an annual basis. The qualification testing shall be performed by an agency listed with the department of buildings, and the inspector shall have a minimum radiography qualification of Level II in accordance with the American Society of Non-Destructive Testing Recommended Practice Document No. SNT-TC-1A, Supplement A. Copies of the certified welder qualification reports shall be maintained by the responsible welding contractor and shall be made available to the department of buildings upon request.

b) Welding requirements. All welded gas distribution and meter piping main and branch supplies to customer equipment operating in excess of 3 psig inside buildings shall be butt welded; and shall be subject to controlled inspection. Radiography shall be performed on all butt welds in gas meter and gas distribution piping operating at pressures exceeding 3 psig, within buildings, in accordance with API 1104-1977 or ASME Section IX Boiler and Pressure Vessel Code 1980.

c) Welding Requirements NYC. In addition, to Section 8.6.6 a & b, shall be subject to special inspection in accordance with Chapter 17 of the New York City Building Code.

8.7 GAS PIPING (INDOORS AND OUTDOORS) ABOVE GROUND, INSTALLATION REQUIREMENTS, GENERAL

8.7.1 Gas piping in concealed locations shall be installed according to the requirements in NFPA-54, FGCNYS, NYCFGC **or local codes.** If it is desired to locate concealed gas piping in partitions, piping shall be located in hollow

partitions, such as in ventilated chases. Concealed piping in solid partitions is prohibited.

8.7.2 Gas piping inside or outside of any building shall not be run in or through an air-duct, clothing chute, chimney or flue, ventilating duct, dumb waiter or elevator shaft.

8.7.3 No other piping or wiring shall be located in a casing containing a gas line.

8.7.4 Gas lines passing through concrete or masonry floor slabs shall be enclosed by a sleeve or thimble.

8.7.5 Gas piping extending through foundation walls below grade shall be sleeved and sealed according to the requirements in NFPA-54, FGCNYS, **NYCFGC and local codes**

8.7.6 The use of gas piping as a grounding electrode is prohibited. Underground gas piping shall be insulated electrically where it connects to piping within the building.

8.7.7 Sediment traps for gas piping shall be installed according to the requirements in NFPA-54, FGCNYS, NYCFGC **and local codes**. When not incorporated as part of the equipment, a sediment trap shall be installed downstream of the equipment shutoff valve (exception: dryers, ranges, outdoor grills and illuminating appliances)

8.7.8 Where a branch outlet is placed on a main supply line before it is known what size pipe will be connected to it, the outlet shall be of the same size as the line that supplies it.

8.7.9 Shutoff valves controlling several gas piping systems shall be accessible for operation and shall be installed so as to be protected from any physical damage. Gas shutoff valves shall be plainly marked with a metal tag by the installer so that each piping system supplied by the valve can be readily identified.

8.7.10 Gas piping shall not be supported by other piping but shall be supported directly by the building structure itself with pipe hooks, metal straps, bands, or hangers suitable for the size of the pipe, and of proper strength and quality at proper intervals so that the piping cannot be jarred or displaced accidentally from its original position.

8.7.11 Listed and approved flexible connectors shall be used for final connections to gas appliances provided the flexible connectors are used on moveable equipment such as gas dryers and gas ranges only, and are placed on the appliance side of the appliance shut-off valve. Certain manufacturers of selected equipment supply flexible connectors for permanent mounted gas utilization equipment. In those cases, the manufacturer's specified flexible connectors shall be installed according to the manufacturer's installation instructions **and local codes**.

8.7.12 Flexible connectors shall not pass through floors or partitions.

8.7.13 For steel gas piping installed outdoors above ground, piping shall be protected with a suitable oil based painting system, or by use of one of the coating systems identified in Section 8.9 of this book. If galvanized pipe is used, painting is not required, but it is recommended that the exposed threads be painted.

8.8 GAS PIPING OUTDOORS, BELOW GROUND, INSTALLATION REQUIREMENTS

8.8.1 New York State's Public Service Commission Regulations require that buried gas piping meet their requirements. These concerns are critical because underground conditions promote corrosion. In order to comply with these laws, the materials and rules in the following sections are provided to ensure that gas piping meets the required standards.

8.8.2 For underground piping, mark-out procedures shall be strictly followed during construction according to the provisions of 16 NYCRR part 753. Prior to excavation, National Grid or its representative will mark out all gas facilities in the public right-of-way. The customer is responsible to mark out all Customer Owned gas and other utilities located on their private property. The number to call to get the facilities marked out is **811**.

8.8.3 Only personnel qualified to perform the specific pipe-joining processes used for any given installation, such as welding for steel and heat fusion for plastic, shall perform this work.

8.8.4 Remote meter sets and meter pads present unique problems. These meters are normally limited to commercial and industrial facilities where multiple buildings are supplied gas from a single meter set location. There are, however, some applications where National Grid requires that a meter be installed remotely from a building due to the inability to locate the meter inside or directly near the building. For these cases, the meter sets are, where practical, installed as close to buildings as possible so that customer piping need not be buried.

These installations, where the piping must be treated as a gas service, require special attention and piping specifications, and are addressed accordingly in Sections 8.9 through 8.14 of this book.

8.8.5 When buried piping downstream of the meter is required, the piping shall be designed and installed according to PSC/ specifications. Where the National Grid Construction Standards (CS) are applicable, those drawings shall be used. When a specific Construction Standard or Construction Detail Drawing is required, the direction will come from National Grid, Project Manager or gas lead.

8.8.6 For buildings where the gas pressure exceeds 1 psig at the point where the service line enters the building, all exterior wall openings that are both below grade and within 10 feet of the gas service line entry point shall be made gas tight. Where such openings are provided for gas service lines, the gas pipes shall be protected from damage by settlement or corrosion.

8.8.7 Customer-owned gas piping shall enter buildings above grade wherever possible to avoid the additional expense of cathodic protection requirements.

8.8.8 Where underground installation of gas piping beneath buildings or portions of buildings is unavoidable, the piping shall be encased in a conduit. The conduit shall extend into a normally usable and accessible portion of the building, and at the point where the conduit terminates in the building, the space between the conduit and the gas piping shall be sealed to prevent the possible entrance of any gas leakage. The conduit shall extend at least 4 inches outside the building, be vented above grade to the outside, and be installed in such a way as to prevent the entrance of water. **National Grid** should be contacted for any questions or clarifications.

8.8.9 All piping below ground shall be installed with a minimum of 18 inches of ground cover (24" depth of cover in NYC) and clearance of 6 inches from other sub-surface facilities or materials. Where other subsurface facilities prevent the installation of gas piping at this minimum depth, the area with less cover shall be protected by a steel schedule 40 pipe casing two pipe sizes larger than the gas pipe or a 1/4" thick steel plate that extends 12" horizontally each side beyond the limits of the gas piping.

8.8.10 Where steel pipe is used, below grade piping and fittings shall be fully coated and cathodically protected according to National Grid Specifications as defined in Sections 8.9 through 8.11 of this book, and the National Grid Construction Standard.

8.8.11 Back fill around pipe shall consist of loose dirt or sand, must be free of rocks, building materials or other debris.

8.8.12 Where plastic pipe is used **(where code permits)**, connections between metallic and plastic pipe shall be made (below grade) only with fittings approved by the pipe manufacturer. Information concerning these fittings can be obtained by contacting National Grid. The recommended ways to make this transition connection are: **See Section 8.12 for plastic pipe installations.**

Use of an approved service riser assembly;

- Use of an approved transition fitting. These fittings are couplings that have been tested and approved by National Grid based on their ability to resist longitudinal pullout forces.

8.8.13 **For Long Island & Rockaways Only**: For all underground piping customer/plumber/contractor shall fill out the "Customer Owned Gas Piping Certificate" form in Appendix F. The form shall be submitted to National Grid at the time the meter is delivered. This as-built drawing of the piping shall be submitted regardless of 3rd party inspection.

8.8.14 ***All*** piping shall be pressure tested according to Appendix D of this book prior to acceptance by National Grid.

8.9 STEEL GAS PIPING, CORROSION PROTECTION REQUIREMENTS, COATING AND WRAPPING

8.9.1 For steel pipe, above ground or below ground, the following information shall be used for coating and wrapping. If ***bare steel pipe*** (as opposed to mill wrapped pipe) is used ***below ground,*** the following procedures are ***mandatory*****.** If bare steel pipe is used above ground, these procedures are optional, as opposed to use of oil based painting systems.

8.9.2 Steel piping shall be given a primer coating and then wrapped with a tape suitable for underground use. Do not use Electrical Tape. See National Grid Construction Standards CORR5040 and CORR 6500. The pipe surface shall be clean and free of rust prior to applying the primer coat. Tape wrapping shall be spirally wound with a half overlap on each turn **it is recommended that the exposed threads be painted**.

8.9.3 The following materials are acceptable for coating and wrapping steel pipe:

- Polyken Technologies Pipeline Primer #1027 or equal, in conjunction with Polyken Tape #936 or equal, or Polyken Gas Utility Tape or equal.

- Tapecoat Company CT Coldprime or equal in conjunction with Tapecoat Pipe Tape H-30 or H-50 or equal.

8.10 STEEL GAS PIPING, CORROSION PROTECTION REQUIREMENTS, INSULATING JOINTS

8.10.1 Insulating couplings or fittings shall be used to electrically separate the underground portion of steel piping from the above-ground piping or the piping in a building. The insulators shall be located on the above ground portion of a riser and on the pipe immediately after entering a building wall. No other connections shall be made to the underground portion of piping that could result in an electrical ground to the piping, since this will cause the insulators to be ineffective. Insulating unions, threaded or insulating couplings, or insulating flanges are typically used for these connections. Insulated compression couplings shall be used on outdoor installations only.

8.11 STEEL GAS PIPING, CORROSION PROTECTION REQUIREMENTS, MAGNESIUM ANODES

8.11.1 Magnesium anodes shall be electrically attached to the underground steel piping using a thermite welded (often called “cadweld”) connection. These anodes are available in 3 pound and 17 pound ingot sizes with a wire connection lead attached.

8.11.2 One 3-pound anode shall be installed where the total underground piping length is 10 feet or less. When the total length of underground pipe is greater that 10 feet, install one 17-pound magnesium anode for every 100 feet of underground piping. ***Note: Always bury an anode with the container it comes in. Do not remove it from the cardboard box!***

8.11.3 The anode ingot shall be buried in the soil approximately 2 feet to the side and below the level of the piping at a location near the center of the section pipe being protected.

8.11.4 The wire lead shall be attached to a bare steel area of the pipe using a thermite weld kit, using a #15 Green Cap cartridge specifically manufactured for attachment to schedule 40 pipe. After attaching, the coating in the thermite-welded area shall be restored (re-coated) so that no bare metal remains.

8.12 PLASTIC PIPING, INSTALLATION REQUIREMENTS **(Where allowed by Code)**

8.12.1 New York state code requires that plastic pipe and fittings shall be installed by qualified personnel according to the manufacturer's written installation instructions.

8.12.2 Before using materials, visually inspect for damage such as gouges, scratches and kinks, and discard any damaged materials.

8.12.3 PE pipe and tubing must be laid on undisturbed or well-compacted soil or other continuous support. Suitable rock-free back-fill shall always be placed around the pipe or tubing.

8.12.4 In addition to the minimum depth of coverage, consideration must be given to future loading and activity above and around the piping to determine if encasing the pipe in a steel sleeve is necessary.

8.12.5 Pneumatic or mechanical tamping shall not be used within 12" of the plastic piping.

8.12.6 Pipe or tubing must be free of cuts and scratches deeper than 10% of the wall thickness. Defects in pipe, tubing or fittings cannot be repaired. Therefore, the damaged pipe, tubing or fittings must be replaced. PE pipe shall not be used inside buildings or above ground.

8.12.7 PE pipe and tubing shall be joined by heat fusion or by mechanical fittings (mechanical service head adapters).

8.12.8 Mechanical fittings shall not be used where pressure exceeds 5 psi or pipe size is greater than 4" diameter, except in certain instances where a customer-owned piping system qualifies.

8.12.9 Heat fusion joints shall be made according to the manufacturer's recommended heat fusion procedures.

8.12.10 Miter joints are not permitted.

8.12.11 Joints shall not be located in pipe bends.

8.12.12 See the pipe manufacturer’s requirements for minimum bending radius of plastic pipe.

8.12.13 ***Heat fusion joints shall be performed only by personnel qualified in the appropriate joining techniques.***

8.12.14 A #14 AWG, minimum, insulated solid copper wire shall be installed alongside but not touching the plastic pipe to facilitate locating with a pipe locator. Tracer wires shall terminate in an accessible location above ground so that a pipe locator can be connected.

8.12.15 A bright-colored plastic warning tape shall be buried approximately 12" directly above the plastic pipe and at least 6" below grade to mark the location of the pipe and to warn future excavators.

8.12.16 Insulating couplings or fittings shall be used to electrically separate the underground portion of plastic piping from the above-ground steel piping or the piping in a building. This is necessary to protect the gas riser, and also is necessary for anodeless, pre-coated riser.

8.12.17 For NYC: Plastic Fuel Gas Piping installations shall be performed by trained, qualified and certified personnel by National Grid.

8.13 COPPER TUBING INSTALLATION REQUIREMENTS (Where allowed by Code)

The sizing of copper tubing shall be selected based upon the maximum capacity of natural gas in cubic feet per hour as specified in of NFPA-54, FGCNYS or NYCFGC**.**

8.13.1 **Fittings for copper tubing shall be wrought copper. Cast fittings are not permitted.**

8.13.2 Copper tubing shall not be used above or below ground from the meter outlet to the building foundation, such as from remote meter pad locations, under the building foundation, or through the building wall.

8.13.3 ***Soft solder joints (sweated joints) shall not be permissible.***

8.13.4 When mechanical joints are necessary for joining copper tubing standard SAE flared fittings shall be used.

8.13.5 ***Threading of copper tubing shall not be permissible.***

8.13.6 Insulating couplings or fittings shall be used to isolate transitions from copper to other metal piping and to electrically separate the underground portion of copper tubing with the tubing above ground or the tubing in a building.

8.14 GAS PIPING THROUGH BUILDING WALLS, ABOVE OR BELOW GROUND, INSTALLATION REQUIREMENTS

8.14.1 That portion of customer-owned outdoor steel gas piping, **above** ground that runs through an external building wall (the wall piece) shall be coated or wrapped using one of the coating and taping systems listed in Section 8.10 of this book. This requirement shall be applicable to all steel pipe, including black pipe, and to piping above ground that runs through walls. **PVC tape is not acceptable for wrapping pipe for this purpose**. If galvanized pipe is used, taping of the pipe is not required, but it is recommended that the exposed threads be painted.

8.14.2 For wall penetrations below ground, refer to the appropriate National Grid drawing for installation requirements and details. Note that a sleeve is required for this application.

8.15 PRESSURE TESTING OF GAS PIPING

8.15.1 All pressure testing of gas piping shall be performed according to the procedure in Appendix D of this book.

9.0 GAS UTILIZATION EQUIPMENT

9.1 GENERAL

9.1.1 APPLIANCES- ACCESSORIES AND EQUIPMENT APPROVAL

All of the gas appliances and accessories that National Grid services, and referred to in this book shall be design-certified by a nationally recognized testing and/or listing agency, such as **CSA** or Underwriters Laboratories, **M.E.A.,** to comply with the applicable American National Standard.

9.1.2 INSTALLING CONTRACTOR'S RESPONSIBILITIES

The work performed by the contractor shall comply with the applicable Building Code of Nassau or Suffolk County, or the City of New York, and all departments and bureaus having jurisdiction over the installation. The contractor shall obtain all necessary permits and certifications that may be required for the job.

requirements for gas utilization equipment, collected together in the following sections, are intended to supplement or amplify, but not substitute for, any applicable State, City, Town or Village codes, regulations or ordinances. If there is a conflict between the National Grid requirement and the municipal requirement, ***the more stringent requirement will govern.***

In all cases, it is the installer's responsibility to comply with all local municipal requirements. National Grid does not assume the obligation of enforcing or inspecting for compliance with municipal code requirements.

9.1.3 CO ALARMS

Carbon Monoxide (CO) is a highly toxic gas. It is the product of incomplete combustion of fossil fuels such as oil, natural gas, propane, gasoline, wood and coal. CO is very dangerous because it is colorless, odorless and tasteless.

In New York City, Local Law 7, requires the installation of CO Alarms in all new and existing 1 and 2 family houses, apartment buildings, hotels dormitories, nursing homes and schools, where fossil fuel burning furnaces or boilers are installed.

In New York State, Part 1225.2 of Title 19, requires the installation of CO Alarms in newly constructed dwelling units and in dwellings units offered for sale.

National Grid recommends the installation of CO Alarms in all areas and recommends annual maintenance of the heating system.

For the correct location of CO Alarms and for the full text of the NYC and NYS CO Alarm Law, see Appendix G.

9.1.4 ASSEMBLY OF EQUIPMENT

The installing contractor shall assemble the equipment according to the installation instructions of the manufacturer.

9.1.5 GAS UTILIZATION EQUIPMENT INSTALLED IN RESIDENTIAL GARAGES

Gas utilization equipment installed in residential garages and in adjacent spaces that open to the garage and are not part of the living space or dwelling unit, shall be installed so that all burners and burner ignition devices are located at a minimum of 18" above the floor unless the equipment is listed as "Flammable Vapor Ignition Resistant" per NFPA-54.

9.2 NATIONAL GRID "NATURAL GAS PRESSURE, IGNITION & DRAFT TEST"

On new gas meter installations National Grid will perform a natural gas pressure test (lock up & run), ignition and draft test on new natural gas utilization equipment; however, it is up to the installing contractor to insure the equipment meets the manufacturer's installation guidelines.

9.3 GENERAL REQUIREMENTS, SPACE AND WATER HEATING EQUIPMENT INSTALLATIONS

9.3.1 Certified Rating plates shall be securely fastened to the appliance.

9.3.2 A complete set of manufacturer's operating, installation and maintenance instructions shall be made available.

9.4 COMBUSTION, DILUTION AND VENTILATION AIR (FRESH AIR) REQUIREMENTS

9.4.1 Air for combustion, dilution and ventilation air installed in any size room shall be installed according to the requirements of NFPA-54, FGCNYS or NYCFGC.

9.5 VENTING OF CATEGORY I GAS UTILIZATION EQUIPMENT ONLY

9.5.1 Venting of all equipment shall be provided according to the latest version of the National Fuel Gas code, NFPA 54, FGCNYS or NYCFGC.

9.5.2 For Long Island, refer to the Fuel Gas Code of New York State, Section 503.6 and NYC, refer to the New York City Fuel Gas Code for multi-story venting installations. Gas vents serving equipment on more than one floor, a single or common gas vent shall be permitted in multistory installations to vent Category I equipment located on more than one floor level, provided the venting system is designed and installed in accordance with this section and approved engineering methods.

Equipment separation. "All equipment connected to the common vent shall be located in *rooms that do not communicate with occupiable and/or habitable spaces.

(*rooms with outdoor access only)

9.5.3 Use of "Wye" connectors are recommended in all Category I venting systems. Use of a standard tee at any point in a venting system **is also acceptable.** When using either type of fitting, the body of the wye or tee shall be the same full size as the common vent. For example, in a case where two appliances are to be commonly vented, each of which require a 4" separate vent connector, and the common vent required is 6" (arrived at by using the vent tables), a 6 x 6 x 6 wye or tee using reducing collars on the two inlets is acceptable. A 4 x 4 x 4 wye or tee with a reducing collar on the common outlet is not acceptable.

9.5.3.1 A 6 x 6 x 4 tee, where the 4" size (typical for use in venting a water heater) is the bull of the tee, which allows for the main body of the tee to be the same size as the common vent, or 6") a 4" reducing collar would also be required on the inlet leg of the tee); or

9.5.3.2 A 6 x 6 x 4 wye, where the side connection entering at an angle is 4", but the main body of the wye is 6" (also required a 4" reducing collar on the other inlet of the wye.

9.5.4 **Use of draft hoods on gas designed equipment shall not be altered.**

9.6 VENTING OF GAS UTILIZATION EQUIPMENT - **CATEGORIES II, III AND IV**

9.6.1 Venting for Category II, III and IV equipment (as defined in NFPA 54, FGCNYS or the NYCFGC) shall be installed according to the manufacturer's installation instructions.

9.7 CHIMNEYS

9.7.1 **The contractor shall perform an inspection on the chimney venting system to ensure it confirms to nationally recognized standards.** The contractor shall not install a flue connector into a chimney breech opening that is smaller than the connector, or extend the breaching beyond the chimney lining. Under no circumstances shall this rule be violated.

9.7.2 For the proper sizing of vents connected into Type B Double Wall Vents, Interior and Exterior Masonry Chimneys, please follow the Venting tables listed in NFPA-54, FGCNYS or the NYCFGC. Special care must be taken when

venting new equipment into an existing exterior masonry chimney. For additional information on Venting and Combustion Air, please refer to: "Choosing a Furnace or Boiler" in Appendix E.

9.8 SPILL SWITCH REQUIREMENTS

9.8.1 A manual reset thermal cut-off device (spill switch), UL tested and approved, shall be required on all natural-draft, gas-fired equipment used for space heating; i.e., all boilers, furnaces and conversion burners. This device shall shut off the gas to the burner in the event of chimney blockage or continued back draft. It is important to note that, as of January 1, 1991, boiler manufacturers are ***required*** by Federal law to provide both a ***spill switch and flame roll out switch*** on all ***new*** atmospheric gas boilers and furnaces having a rating of 300,000 Btuh or less. interpretation of this ruling is to expand the requirement for spill switches to all natural draft appliances regardless of vent size, or whether or not the appliance is installed in a residential, commercial, industrial or multi-family establishment. For gas ***conversion burners*** that are installed in residences and other occupancies that utilize masonry chimneys or gas vents, a manual-reset thermal spill switch is also required. Add-on spill switches shall also be UL tested and approved.

In New York City, when multiple gas appliances having inputs above 300,000 BTU's (300 CFH) are connected to a common vent/chimney, each individual Spill Switch must be electrically wired in series with each other.

9.9 INSTALLATION OF HEAT PRODUCING EQUIPMENT IN FLAMMABLE OR CORROSIVE ATMOSPHERES

9.9.1 In operations where there is use of flammable liquids or agents, or aerosol sprays using halogenated hydrocarbons such as carbon tetrachloride, special care shall be taken in the installation of heat-producing equipment. Flammable liquids clearly must be kept a significant distance away from gas burning flames for safety reasons. Not so apparent, however, halogenated hydrocarbons tend to break down in temperatures above 500 degrees F and form toxic fumes. These fumes are extremely corrosive and will accelerate damage to heatproducing equipment, flues and exposed metal surfaces.

9.9.2 It is imperative that all air for combustion come from out-of-doors in environments of this nature, unless the equipment can be isolated from the contaminated atmosphere.

NOTE

NATIONAL GRID REQUESTS THAT ANY CUSTOMER WHO PLANS INSTALLATIONS IN THIS TYPE OF ATMOSPHERE CONTACT **NATIONAL GRID**

CAUTION

The contractor is advised to become fully aware of the boiler control requirements as provided for in the latest revisions of ASME CSD-1 and New York State Code Rule 4. These documents may require additional safety controls over and above those required by this book or as furnished standard from the manufacturer for selected commercial, industrial and multi-family establishments.

9.10 GAS CONVERSIONS AND CONVERSION BURNER REQUIREMENTS

9.10.1 Conversion burners and associated equipment for gas conversions shall be installed according to the burner manufacturer's installation instructions, NFPA-54, FGCNYS or the NYCFGC and ANSI Z21.8.

9.10.2 Burner flame shall not impinge upon any surface or obstruction in the combustion chamber. The heating contractor shall place the burner in the combustion chamber so that the burner head is centered.

9.10.3 When installing conversion equipment, the combustion chamber and flue passage ways of the existing appliance shall be thoroughly cleaned using wire brushes and a vacuum.

9.10.4 Conversion burner nozzle shall not extend into combustion chamber.

9.10.5 Combustion chamber shall be installed on dry-base boiler if upshot gas burner is not used.

9.10.6 Burners shall be adequately supported, i.e., burner legs shall be required, or burner shall be resting on a firm and level foundation, where applicable.

9.10.7 Burners shall be properly attached to boiler flange.

9.10.8 Unit shall be inspected and tested for gas tightness. All openings around the boiler base at floor level, doors and at gun entrance shall be properly sealed with masonry cement or equivalent to prevent air leakage into the boiler. Clean outs and burner blast tube, except fire door, shall be sealed with non-asbestos type furnace cement.

9.10.9 Unless otherwise specified by the burner manufacturer, always install a gas designed ***double-acting*** barometric draft regulator in the vent connector. Gas designed barometric draft regulators shall be installed according to manufacturer's installation instructions (power burner only).

A manual reset or single use type thermally actuated spill switch shall be installed on the double-acting barometric draft regulator. This switch is wired into the burner circuit to shut the gas off in case of a sustained back draft or blocked chimney condition.

9.10.10 Stack switches or stack aquastats shall be removed from electric circuit so they do not function as operating gas controls.

9.10.11 Base of chimney shall be cleaned, and the chimney wire brushed from top to bottom. If not properly cleaned, oil residue left on the gas vent will dry out over time, flake off, and drop downward, possibly building up to cause a blocked chimney condition.

9.10.12 Vent connector shall be properly sized. Check the existing vent connector size against the proposed firing rate of the gas burner to determine if the vent

connector is too big or small. Replace the vent connector if its size does not correspond with the vent tables in NFPA-54, FGCNYS or the NYCFGC.

9.10.13 Contractors are advised that gas conversion burners are not delivered adjusted for proper input and combustion air. Therefore, appropriate adjustments ***shall be made*** to ensure proper draft, proper CO readings and other items necessary for safe operation.

9.11 GAS FIREPLACES (VENTED DECORATIVE GAS APPLIANCES)

9.11.1 In all cases, these appliances shall be installed according to applicable state codes, the manufacturer's installation instructions and other specific conditions of approval. Within New York City, the appliance shall be approved for use in the City of New York.

9.11.2 Existing masonry fireplace flues must first be investigated and determined to be adequate, unobstructed, and with no upper-story openings or connections. All applicable clearances, air for combustion and ventilation requirements shall be observed.

9.11.3 Approved factory-built fireplaces, where installed indoors, must be vented through an approved Type B vent or lined chimney. All applicable clearances, air for combustion and ventilation requirements shall be observed.

9.12 ILLUMINATING DEVICES

9.12.1 All gas lights shall be listed by the **IAS, CSA, UL** or other qualifled technical listing organization. Gas lights shall be installed according to their listings, all local codes, National Grid requirements and the manufacturer's installation instructions.

9.12.2 Gas pressure regulators shall be installed for all illuminating appliances.

9.12.3 Gas lamps designed for post mounting shall be securely and rigidly attached to a post.

9.12.4 Adequate concrete shall be used around the base of the supporting lamp post and underground piping shall not be embedded in post concrete.

9.12.5 A shutoff valve shall be installed on the line to the gas light at the point where it connects to the house riser and shall be in an accessible location.

9.12.6 Where permitted by local authorities having jurisdiction, outdoor gas torches, used to symbolize some event or to adorn landmarks, entrances, etc., may be installed. These devices often require high gas inputs, and therefore, the contractor/customer shall proceed with caution. National Grid shall be consulted on all such installations.

9.12.7 New pedestals for gas torches shall be supported by an adequate concrete base. Gas pipe shall not be embedded in this base. Existing columns, which are used to support gas torches, may encase inlet gas piping subject to approval of the manner of connection by National Grid.

9.12.8 **No gas torch flame shall be less than 7' above the immediate ground level.**

9.13 NATURAL GAS COMBUSTION ENGINES

Natural gas-fired combustion engines are generally utilized for engine-driven air conditioning, cogeneration, heat pump and other gas engine driven applications. National Grid is to be consulted regarding any proposed installations. All installations shall be performed according to the manufacturer's installation instructions, New York State and City Codes and NFPA-37. National Grid 's shall be consulted prior to proceeding with any plans to install natural gas combustion engines.

9.14 COMPRESSED NATURAL GAS (CNG,) STATIONS

Compressed Natural Gas (CNG) stations shall not be planned without consultation with National Grid.

9.15 UNVENTED ROOM HEATERS

Unvented room heaters shall be tested in accordance with ANSI Z21.11.2 and shall be installed in accordance with NFPA 54, FGCNYS, NYCFGC and the manufacturers installation instructions. They may not be used as the primary heat source. Unvented room heaters must be equipped with an oxygen depletion sensor safety shutoff system. Unvented room heaters are currently prohibited in New York City.

9.16 OTHER EQUIPMENT

Any gas utilization equipment not covered in this manual shall be installed according to the National Fuel Gas Code**,** FGCNYS, NYCFGC **and local codes**. National Grid shall be consulted for further guidance on any equipment not covered in this book.

9.17 COMBO WATER HEADERS

Water heaters utilized both to supply potable hot water and provide hot water for space heating applications shall be listed and labeled for such applications by the manufacturer and shall be installed in accordance with the manufacturers installation instructions (in New York City installed in accordance with the New York City Plumbing Code).

APPENDIX A

APPENDIX A

SERVICE REGULATOR VENT PIPING REQUIREMENTS

1.0 Contractors shall size and lay out service regulator vent piping in accordance with the following requirements:

1.1 Vent lines for gas pressure service regulators shall be piped using rigid steel Schedule 40 pipe, sized in accordance with Tables 2 through 7 of this Appendix, and installed in accordance with the National Grid Construction Standard SERV-6225 and the instructions contained in this Appendix. All service regulator vent lines shall be located such that, should venting to the atmosphere occur, a hazard is not created.

1.2 Vent piping installed outdoors shall be galvanized or primed and painted with screwed ends. For those cases where vent pipe is installed with welded end connections, the pipe shall be primed and coated with a painting system suitable for outdoor applications. Vent piping installed through outside walls shall be protected against corrosion in accordance with the requirements contained in Section 8.0 of this book.

1.3 Where there is more than one service regulator or relief valve at a meter header location, each regulator shall have its own separate vent line to the outdoors. Manifolding of vent lines shall not be permitted.

1.4 Regulators shall not be vented commonly with external relief valves or devices requiring atmospheric air pressure to balance a diaphragm.

1.5 National Grid Technical Lead will provide size and termination location, as part of the installation design when vent lines are required. The contractor shall furnish the labor, materials and the layout for the installation of the regulator vent line.

1.6 The size of service regulator vent lines shall not be less than the size of the connection on the regulator vent.

1.7 All vent lines shall have an insulating union installed as close to the regulator as possible. The insulating union will be provided by National Grid.

1.8 Vent line termination points shall be provided with approved rain caps and insect-resistant screens. National Grid shall furnish the contractor with these combination rain caps and insect-resistant screen devices at the construction site meeting with the installing contractor. The contractor shall provide the labor to install the devices. Combination vent caps are available for the following pipe sizes as shown in Table 1.

TABLE 1

NATIONAL GRID COMBINATION VENT CAPS

NATIONAL GRID ITEM ID	VENT PIPE DIAMETER
301023	3/4"
786214	1”
301026	1-1/4"
301035	2”
301036	3”
301037	4”

1.9 Vent line piping shall contain a minimum number of bends and elbows. Each fitting offers resistance to gas flow, that can be expressed as an **equivalent length** of pipe. Equivalent lengths for elbows are given underneath each table in Tables 2 through 7 of this Appendix. The equivalent length of the fittings shall be **added to the actual length of piping** when selecting vent pipe size.

1.10 Where vent pipe size in the tables is larger than the regulator vent outlet, a pipe reducer (increaser) shall be installed as close to the regulator vent as possible, preferably immediately at the regulator vent outlet.

1.11 Vent piping is not permitted to be installed below-grade. If it penetrates a building foundation wall above ground, the piping shall meet the same requirements as buried gas piping regarding corrosion protection, i.e., coating, wrapping, cathodic protection, etc. in accordance with the Section 8.0 of this book.

1.12 Regulator vent piping for outdoor regulators shall only be required to clear a building overhang or to provide the required clearances above the ground, or away from building openings or windows. Clearance for a given installation shall be as specified in the National Grid construction standards.

1.13 For Tables 2 through 7 which follow, the maximum length of vent pipe and number of fittings allowed in each case **shall not be exceeded under any circumstances.**

RECOMMENDED VENT LINE SIZING CHARTS

If length exceed the lengths on the chart, contact National Grid's technical lead.

TABLE 2

For regulators with 3/4" screwed end connections and 3/4" regulator vent opening, that reduce pressure in mains operating at pressures between 99 psi and 124 psi.

3/4" Regulator Vent Pipe			
Max. Length	12'	10'	8'
Number of 90° Elbows *	1	2	3

* Each elbow equivalent length = 2.0'

TABLE 3

For regulators with 3/4" x ¾" or ¾" x 1" screwed end connections and 3/4" or 1" regulator vent opening, that reduce pressure in mains operating at pressures between 99 psi and 124 psi.

1 1/4" Regulator Vent Pipe			
Max. Length	20'	17'	13'
Number of 90° Elbows *	1	2	3

* Each elbow equivalent length = 3.5'

GAS SERVICE REGUIATOR VENT SIZING CHARTS

TABLE 4

For regulators with 3/4" x ¾" or ¾" x 1" screwed end connections and 3/4" or 1" regulator vent opening, that reduce pressure in mains operating at pressures between 99 psi and 124 psi.

1" Regulator Vent Pipe			
Max. Length	15'	12'	10'
Number of 90° Elbows *	1	2	3

* Each elbow equivalent length = 2.6'

TABLE 5

For regulators with 3/4" screwed end connections and 3/4" regulator vent opening, that reduce pressure in mains operating at pressures of 60 psi or less.

3/4" Regulator Vent Pipe			
Max. Length	29'	27'	25'
Number of 90° Elbows *	1	2	3

* Each elbow equivalent length = 2.0'

GAS SERVICE REGUIATOR VENT SIZING CHARTS

TABLE 6

For regulators with 1 1/4" body size and 3/4" regulator vent opening, that reduce pressure in mains operating at pressures of 60 psi or less.

1 1/4“ Regulator Vent Pipe	**2” Regulator Vent Pipe**
Maximum Length = 43'	Maximum Length = 60'
Number of Elbows* = 3	Number of Elbows* = 3

* Each elbow equivalent length = 3.5'

NOTE
1-1/4” Regulators with 1-1/4” bodies and 3/4” vent openings shall have 1-1/4” size vent lines as a minimum

TABLE 7

For regulators with 2" body size 1" regulator vent opening that reduce pressure in mains operating at pressures between 60 psi and 124psi.

2” Regulator Vent Pipe
Maximum Length = 23'
Number of Elbows = 1

* Each elbow equivalent length = 5.2'

APPENDIX B

APPENDIX B

CHOOSING A FURNACE OR BOILER

Higher Efficiency. Its Advantages and Disadvantages

Since the energy crisis of the 1970's consumers have been motivated to demand higher efficiency furnaces and boilers, and to increase the thermal insulation and tightness of their homes. As a result, manufacturers have responded with the higher efficiency heating units which are widely in use today, and builders have responded with the increase in tighter construction methods for homes now equally widely used. As a result of these new trends, a significant amount of attention has been focused on certain technical topics in the heating business which have traditionally been accepted as cut and dried, but recently have caused some controversy. It was discovered, to the dismay of many, that these long-accepted ways of installing heating appliances are no longer valid. The changes faced by today's furnace and boiler installers include increased efficiency, reduced dilution air, increased air contamination and decreased heating loads. It has been common to discover that new installations are deficient because of improper combustion, dilution and ventilation air, and even improperly selected boiler or furnace sizes. Therefore, the following information is provided to help ensure that new installations and conversions are properly designed and installed. The correct place to begin is for to selecting a furnace or boiler for your installation.

Increased Thermal Efficiency Proper Venting

Increased thermal efficiency of newer units means, among other things, that for a given retrofit installation in a building that has not been modified using insulation and/or caulking, a smaller capacity unit will often do the same job as the older unit did. But it is possible that the older unit may not have been sized correctly! Indeed, many older units were oversized. Therefore, it can be problematic to simply substitute a new unit of the same input as the older one., Increased efficiency of abeating unit typically means a lower flue gas temperature, since most higher efficiency units wring out more Btu's from the flue gases in their heat exchangers. This lower outlet temperature means that the flue gases start their trip out the vent much closer to their dewpoint. Thus, condensate will be produced in the vent earlier in the on-cycle, and more condensate per total unit volume of flue gases will be produced in the new units than in the older, less efficient units. This means that the "wet time" in the vent will be longer, during which time the condensate stays in the stack without being vaporized by flue gases.

Since many Category I, mid-efficiency units are fan-assisted, the draft hood is eliminated, thereby essentially eliminating dilution air to the vent, reducing the total vent flow. Combining this characteristic with the use of vent dampers, off cycle loss of gases through the vent is reduced drastically. As a result, no dilution air can be relied on during the off cycle to help dry the stack. In addition, these characteristics combine to leave a vent pipe even colder during the off-cycle than in older less efficient units, requiring a longer time to heat up during the on-cycle.

In summary, comparing a newer, more efficient unit to an older less efficient unit of the same input, a smaller volume of flue gases will flow in the new unit at a lower temperature through a colder vent, which must be relied upon to remove essentially the same amount of water vapor as was produced in the old unit. The capacity of these gases to vaporize the moisture is significantly less in the new unit as compared to the old. The result is longer wet time in the new unit's vent, a condition which promotes corrosion very quickly, especially if chlorine from indoor air condition is absorbed into the condensate, producing hydrochloric acid. A corroded vent can release deadly carbon monoxide into the living space. An equally deadly scenario is the deterioration that takes place in a masonry chimney, where the mortar disintegrates, the lining collapses, and the chimney becomes blocked, also spilling flue gases into the living space.

Special care must be taken when replacing older heating equipment that will be vented into an existing exterior masonry chimney. Please follow the Venting tables listed in NFPA-54 or the FGCNYS.

Tighter Buildings: Combustion Air

If the building has been upgraded with new insulation, thermal-pane and tightly sealed windows, along with caulking and wrapping, the thermal characteristics of the building have been altered to make it more thermally efficient. The increased thermal efficiency of a building means the heating load is lower. The tightness of the building means the infiltration losses have been decreased, but the combustion air requirements, which formerly depended on a certain amount of infiltration, must be closely re-examined. If infiltration, and therefore some of the source of combustion air, has been drastically reduced, the reduction can increase spillage of combustion products upon start-up of a draft hood appliance. Secondly, the lowered rate of air change means that any source of combustion air contamination, such as chlorides from hairsprays, etc. will remain at an elevated concentration rather than be diluted. Contaminants containing chlorine have been shown to greatly increase the corrosivity of flue gas condensate, forming hydrochloric acid.

All of these characteristics taken together require that a vent be sized as carefully as possible, with special attention not to over-size the vent. In the past, gas furnaces and boilers released more than 25 % of their input energy into their vents. This generous amount of heat flowing through the vent made vents much more forgiving of design errors. Now, proper venting of higher efficiency furnaces and boilers requires more knowledge and greater care on the part of the installer.

A Case of Improper Venting

Clearly, a great deal of attention must be paid to venting of modem boilers/furnaces. Take as an example, a typical situation where a person installs a new boiler to replace an aging, less efficient one. In assessing the situation, it is determined that a newer, Category I, mid efficiency, fan assisted unit is a sound, economical choice. It seems logical that a unit of the same input rating should be selected. A contractor is hired, and installs most things properly, but vents the unit to the same outside chimney used for the older unit. After a period of time, the consumer calls National Grid Energy Delivery to trouble-shoot a "leak" in his newly installed boiler. He is dismayed to discover that there is no real leak, but that his chimney is condensing. He decides that this is not a real problem, and that there is no need for further action. Soon his chimney tiles begin to collapse inside, and begin to block the vent gases to the point where the unit shuts down on high pressure. Now he has a very large repair bill on his hands to rectify his collapsed chimney. All of this could have been prevented by selecting the correct venting arrangement. In this case, an approved, listed chimney liner system, properly sized and installed, would have saved a large sum of money and many headaches.

Pre-Sale Inspection

The heating contractor seeking to sell a furnace should begin approaching a job by first carefully assessing the heating load of the structure, the suitability of the existing system vent, and the environment into which the unit will be placed. It is also important that sales and installation personnel understand the venting characteristics of the different types of appliances available on the market, as well as the differences in combustion, dilution and ventilation air requirements of the newer, higher efficiency units. Computer heat loss programs exist in the market today that make this tedious task less demanding.

Special care must be taken when replacing older heating equipment that will be vented into an existing exterior masonry chimney

Retrofit furnaces or boilers should not be recommended to the consumer on the basis of rules-of-thumb regarding the heat load, nor should it be assumed that the existing venting system can be used without modification. It is imperative that the selection and sales process include a pre-sale inspection of the existing furnace or boiler, the venting system, and the building. It is important to recognize that every furnace or boiler is not equally well suited to every installation. The inspection will help the seller to accurately determine which furnace or boiler can be recommended to the consumer, and will avoid problems for all parties involved.

CO ALARMS

In New York City, Local Law 7, requires the installation of CO (carbon monoxide) Alarms in all new and existing 1 and 2 family houses, apartment buildings, hotels dormitories, nursing homes and schools, where fossil fuel burning furnaces or boilers are installed.

In New York State, Part 1225.2 of Title 19, requires the installation of CO Alarms in newly constructed dwelling units and in dwellings units offered for sale.

The heating contractor should be familiar with the NYC and NYS CO Alarm Law and should determine if a working CO Alarm is installed at the location and should discuss the CO Alarm Laws with the customer.

For full text of the NYC and NYS CO Alarm Law, see appendix G

Please note: National Grid recommends the installation of CO Alarms in all areas and recommends annual maintenance of the heating system.

APPENDIX C

APPENDIX C

NATIONAL GRID
NEW METER SET HOTLINE

NATIONAL GRID
Long Island/Rockaway Peninsula
1-877-MyNGrid*
175 E. Old Country Road
Hicksville, N.Y. 11801

* For non project managed jobs. For projected managed jobs the responsible project manager should be contacted.

New York City Call Center
Metrotech
Brooklyn
1-718-643-4050

APPENDIX D

APPENDIX D

GAS PIPING SYSTEM PRESSURE TESTING REQUIREMENTS AND INSTRUCTIONS

1.0 PURPOSE

1.1 This Appendix provides information and instructions for the contractor regarding National Grid requirements for pressure testing a gas piping system.

2.0 SCOPE

2.1 This document provides information concerning the following: 1. When a pressure test is required to be witnessed by National Grid; 2. The test pressure and test duration (time interval) shall be used for the test; 3. What equipment and/or instrumentation is required for the test; 4. How to conduct the test; and 5. How to report the test results.

3.0 DEFINITIONS

3.1 ***Dial Check:*** A test in which a piping system is proven to be free of leaks that can only be administered after the meter has been installed. The test is conducted by checking movement of that dial on the gas meter that registers the smallest amount of gas. The slightest movement of that dial shall be construed to mean that a leak is present in the system.

3.2 ***Leak Test:*** A test in which a piping system is proven to be free of leaks by **pressurizing the system with natural gas** to its operating pressure and applying a leak-test solution, such as a solution of soap suds, to all the joints in the system.

3.3 ***Pressure Test:*** A test in which a piping system is proven to be free of leaks and capable of operating safely by:

a. Isolating the system from its normal connections. This shall be accomplished by disconnecting the system from its gas source and capping or plugging the disconnected ends.

b. Raising the internal pressure of the gas piping system (usually a multiple of its normal operating pressure) for a specified period of time (time duration or time interval) using air or an inert gas.

c. Monitoring its pressure over the specified period of time to assure that the pressure does not decrease over that time.

3.4 **Minor Alterations; Minor Installation:** An installation in which additional piping is added to an existing piping system already connected to a gas meter. Examples are:

a. Relocation of a gas meter;

b. Addition or replacement of a gas appliance.

4. 0 **GENERAL**

4.1 The owner, contractor shall first determine if a local jurisdictional pressure test is required.

It is the **contractor's responsibility** to determine whether or not the need exists in the geographical area of the installation for a gas piping system pressure test and what the specific test requirements are for a given authority having jurisdiction.

4.2 For Long Island installations, the licensed plumber is required to self certify the installation's integrity by completing the form in Appendix E (This self certification form only applies to Towns without plumbing inspectors). This completed form, along with diagram of any buried piping, will be required at the site prior to the installation of the gas meter by National Grid personnel. It is the Contractor responsibility to install customer owned piping to all National Grid's requirements and to Federal, State and local Codes. Failure to comply with these Codes, may delay the gassing in on the installation. For commercial installations with Class 800 meters and larger, National Grid shall witness the pressure test in those town without plumbing inspectors.

5.0 **GAS DISTRIBUTION PIPING (AFTER THE GAS METER)**

5.1 All installations and testing of gas piping shall conform to the applicable code e.g., NYC Administrative Code, NFPA-54, FGCNY, NYCFGC, State Codes, Local Codes). **Note: All Customer Owned piping in NYC shall be steel.**

5.2 Piping with a maximum operating pressure up to and including ½ psig (14" w.c.).

A. Pipe sizes over 4" are to butt welded.
B. Completed line is to be tested with air or inert gas at 3psig for a minimum of 30 minutes.

FOR NEW YORK CITY

5.3.1 Piping with a maximum operating pressure above ½ psig (14" w.c.) up to and including 3 psig.

A. Pipe sizes 4" and over are to butt welded.
B. Completed line is to be tested with air or inert gas at 50 psig for a minimum of 30 minutes.

FOR LONG ISLAND

5.3.2 Piping with a maximum operating pressure above ½ psig (14" w.c.) up to and including 5 psig.

A. Pipe sizes **over** 4" are to butt welded.
C. Completed line is to be tested with air or inert gas at 50 psig for a minimum of 30 minutes.

FOR NEW YORK CITY

5.4.1 Piping with a maximum operating pressure above 3 psig and up to but excluding 125 psig.

A. All piping is to be butt-welded and radiographed.
B. Testing

1. For piping with a maximum operating pressure of 3 to 15 psig, the completed line is to be tested at 100 psig for a minimum of 1 hour.

2. For piping with a maximum operating pressure above 15 psig, the completed line is to be tested to twice the maximum allowable operating pressure, but not less than 100 psig, for a minimum of 1 hour.

3. Fresh water may be used as the test medium only when the required test pressure exceeds 100 psig.

FOR LONG ISLAND

5.4.2 Piping with a maximum operating pressure above 5 psig and up to but excluding 125 psig.

A. All piping is to be butt-welded.
B. Testing

1. For piping with a maximum operating pressure of 5 to 15 psig, the completed line is to be tested at 100 psig for a minimum of 1 hour.

2. For piping with a maximum operating pressure above 15 psig, the completed line is to be tested to twice the maximum allowable operating pressure, but not less than 100 psig, for a minimum of 1 hour.

3. Fresh water may be used as the test medium only when the required test pressure exceeds 100 psig.

FOR LONG ISLAND AND NEW YORK

5.5 For piping with a maximum operating pressure of 125 psig or greater, contact National Grid's Engineering Area for welding and pressure test requirements**.**

5.6 Testing material and all anchoring and support of pipe shall satisfy applicable minimum National Grid requirements. Plastic pipe, tubing and fittings shall not be used. For information, consult the appropriate National Grid Sales, Support, & Solutions Area or a Project Manager.

5.7 For Buried Plastic or Above Ground Concealed Piping:

A. All buried plastic, galvanized steel or concealed piping that is above ground, must be installed and tested per National Grid requirements as stated in Section 8.6.4. All completed work must include

inspection criteria (ie. caution tape, anodes) prior to backfilling or closing in of the piping.

B. All steel pipe, regardless of being buried or above ground, that is painted, coated or wrapped shall be pressure tested at a minimum of 90 psig for the following times:

Less than 2" diameter; - 1 hour
2" – 12" diameter - 4 hours

(Note: Only painted or galvanized pipe is permitted above grade)

C. Screwed fittings shall not be used in concrete.
Steel piping for incidental outside use, where installed in the ground or in concrete, shall be coated to prevent corrosion. All piping installed in the ground shall comply with applicable sections of National Grid specifications for underground pipe.

5.8 Pressure Test Requirements Summary

PRESSURE TEST REQUIREMENTS

OPERATING PRESSURE (FOR PLASTIC /GALVANIZED OR BARE STEEL PIPE	**TEST PRESSURE AND DURATION**	
	NEW YORK	**LONG ISLAND**
LP to 14" W.C.	3 PSIG / 30 MINUTES	3 PSIG / 30 MINUTES
> 14" W.C. - 3 PSIG	50 PSIG / 30 MINUTES	-------
> 14" W.C. - 5 PSIG	-------	50 PSIG / 30 MINUTES
> 3 PSIG – 15 PSIG	100 PSIG / 1 HOUR	
> 5 PSIG – 15 PSIG	-------	100 PSIG / 1 HOUR
>15 PSIG – 125 PSIG	2X MAOP, BUT NOT LESS THAN 100 PSIG / 1 HOUR	2X MAOP, BUT NOT LESS THAN 100 PSIG / 1 HOUR

OPERATING PRESSURE ANY STEEL PIPE THAT IS PAINTED, COATED OR WRAPPED (ABOVE GROUND OR BELOW GROUND)	**TEST PRESSURE AND DURATION**	
	NEW YORK	**LONG ISLAND**
LP – 60 PSIG	90 PSIG LESS THAN 2" DIA. – 1 HOUR 2"-12" DIAMETER – 4 HOURS	90 PSIG LESS THAN 2" DIA. – 1 HOUR 2"-12" DIAMETER – 4 HOURS

6.0 **INSTRUCTIONS**

6.1 The gas meter, relief valve, service regulator and appliance gas train components and manual shut-off valves shall be physically disconnected from the gas supply system for the pressure test of the customer-owned gas piping system.

When a local town/municipality requires the test, the form for recording the test results will vary depending on the local government. If contractors require a copy, the contractor shall make arrangements through the local governmental jurisdictional office. If copies of pressure test certificates are desired, the necessary arrangements to obtain copies shall be made by the contractor. National Grid requires a copy of the certificate before the activation of gas**.**

APPENDIX E

February 1, 2009

RE: Customer Owner Gas Piping Inspection Certificate

Attached is the new **Customer Owner Gas Piping Inspection Certificate** form which is to be used in the Long Island territories whenever buried gas piping is installed downstream of the gas meter. This form cannot be substituted in lieu of the inspection ce5rtificate issued by the jurisdictional town inspector. However, in those jurisdictions where third party town inspectors is not being performed, the licensed plumber is required to self certify the installation integrity by completing this form. This form will be required at the site prior to the installation of the gas meter by National Grid personnel.

Addition copies of this form can be obtained on-line.

If there are any questions pertaining to the information requested on the form, please do not hesitate to contact your National Grid representative.

This document MUST be completed and signed by the Installer prior to your natural gas service being turned on by National Grid. We appreciate your cooperation.

CUSTOMER OWNED GAS PIPING INSPECTION CERTIFICATE

The undersigned installation contractor hereby represents and warrants that all gas piping and related appliances, appurtenances and equipment installed at the premises described herein have been installed in accordance with all applicable codes, regulations and standards in effect as of the date of this Certificate including, but not limited to, the **Fuel Gas Code of New York State**, the **National Fuel Gas Code**, the **National Grid Blue Book** and the original equipment manufacturer's specifications, guidelines and installation instructions.

The undersigned installation contractor further represents and warrants that all gas piping installed at the premises described herein has been subjected to and passed the pressure test requirements as outlined in the **Fuel Gas Code of New York State** and **National Grid Specifications and Requirements for Gas Installations** as written in the Blue Book. The installation contractor MUST include a historical sketch of the underground piping location as required per the Blue Book, Section 8.4 with this Certificate

The undersigned installation contractor acknowledge that **National Grid's** relying upon the installation contractor's representation and warranties, as well as the accuracy of the information contained in this Certificate, as a condition to turning on the natural gas services at the premises described herein.

Customer Name _____
(Please Print)

Service Location_____
(Street – City)

Daytime Phone_____ Evening Phone_____ Cell Phone_____

Contractor Name_____
(Please Print) (Authorized Signature)

Business Location_____
(Street – City)

Daytime Phone_____ Cell Phone_____ License #_____

Pressure Test @ _____P.S.I. Duration Time _____ (Hrs/Min) Historical Sketch Provided? Y_____ N_____
(Refer to Blue Book for Test Pressures Required and Time Durations)
Local Municipality/Town Pressure Test Certificate Provided? Y____ N____ Plumbing Permit #_____
Piping being tested? Header Y____ N____ Houseline Y____ N____ CSST Piping Bonded and Grounded Y____ N___

Equipment / Appliances Installed -
Generator Y_____ N_____ Pool Heater Y_____ N_____ House Heat Y_____ N_____
Barbeques Y_____ N_____ Water Heater Y_____ N_____ Meter Header Y_____ N_____
Commercial Appliances Y_____ N_____ How Many? _____ Other *(Specify)*_____

Installing contractors, **MUST** check and complete the following information for all **Customer Owned Underground Gas Piping** that has been installed at the subject premises in accordance with this Certificate. Please include the name of the pipe manufacturer, lot number of the pipe installed and the size of the pipe installed.

Installed Pipe Size _____ Pipe Installed @ Minimum Depth of 18"? Y____ N_____

Plastic - Pipe Manufacturer _____ Lot Number _____ SDR _____
Mechanical Fittings Used? Y_____ N_____ Plastic Fussions? Y_____ N_____# Made____
Tracer Wire Installed? Y_____ N_____ Metallic Caution Tape? Y_____ N_____
Non-Metallic Caution Tape? Y_____ N_____

Coated Steel - Anode(s) - Number/Weight _____ Cadweld Y____N____

National Grid **Use Only**
Technician/ Responder _____ Meter Number_____
(Employee Name / Number)
Turned On_____Grid #_____ Residential_____Non-Residential_____
(Date)

SHOW NORTH
ARROW

ADDRESS

_____

_____

_____

CPR # _____

GRID # _____

STREET NAME _____

INSTRUCTIONS:
1. SHOW METER IN RELATION TO BUILDING [M]
2. SHOW UNDERGROUND PIPING AND INDICATE DIMENSIONS AND PIPING ROUTE
3. SHOW LOCATION AND TYPE OF REMOTE APPLIANCE (GENERATOR, POOL HEATER, ETC.)
4. INDICATE NORTH ARROW
5. INDICATE STREET & ADDRESS

EXAMPLE

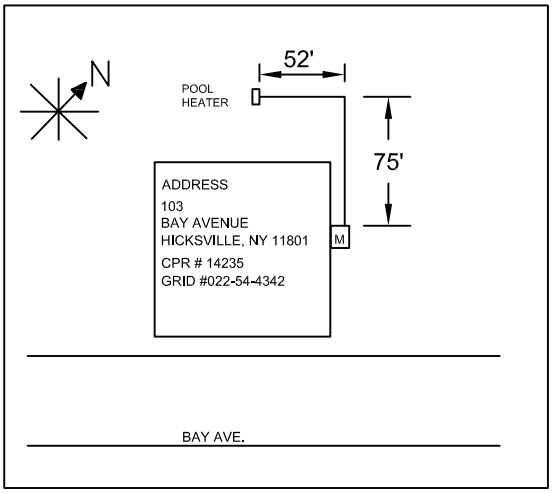

APPENDIX F

Corrugated Stainless Steel Tubing (CSST)

At its meeting held on September 10, 2008, the State Fire Prevention and Building Code Council determined that adopting this rule on an emergency basis is necessary to preserve public safety by clarifying requirements for electrical bonding of gas piping, clarifying requirements for protection of gas piping against physical damage, and adding new requirements for installation of gas piping made of corrugated stainless steel tubing (CSST), which will increase protection against fires caused by lightning strikes in the vicinity of buildings equipped with CSST gas piping and fires caused by accidental punctures of CSST gas piping.

EFFECTIVE September 25, 2008

Subdivision (d) of section 1220.1 of title 19 NYCRR is amended by adding new paragraphs (9), (10), (11), and (12) to read as follows:

(9) 2007 RCNYS Section G2411.1. For the purposes of applying the 2007 RCNYS in this State, the text of Section G2411.1 in Chapter 24 of the 2007 RCNYS shall be deemed to be amended and restated in its entirety to read as follows:

"G2411.1 (310.1) Gas pipe bonding - systems that contain no CSST. In the case of a gas piping system that contains no corrugated stainless steel tubing (CSST), each above-ground portion of the gas piping system that is likely to become energized shall be electrically continuous and bonded to an effective ground-fault current path. Gas piping shall be considered to be likely to become energized if any gas utilization equipment is connected to any portion of the gas piping system and to any electrical circuit(s). For the purposes of this Section G2411.1, gas piping shall be considered to be bonded to an effective ground-fault current path if such gas piping is connected to gas utilization equipment that is connected to the equipment grounding conductor of the circuit supplying that equipment. Nothing in this Section G2411.1 shall prohibit the bonding a gas piping system that contains no CSST in any manner described in Section E3509.7 of this code. (10) 2007 RCNYS Section G2411.2."

(10) For the purposes of applying the 2007 RCNYS in this State, a new Section G2411.2 (to include sections G2411.2, G2411.2.1, G2411.2.2, and G2411.2.3) shall be deemed to be added to Chapter 24 of the 2007 RCNYS, immediately following Section G2411.1, said new Section G2411.2 to read as follows:

"G2411.2 (310.2) Gas pipe bonding - systems that contain CSST. A gas piping system that contains any corrugated stainless steel tubing (CSST) shall be electrically continuous and shall be bonded to the electrical service grounding electrode system at the point where the gas service enters the building or structure. No portion of the gas piping system shall be used as or considered to be a grounding

electrode or a grounding electrode conductor. CSST shall be installed and bonded in accordance with this section G2411.2, and the stricter of: (a) the requirements set forth in the CSST manufacturer's installation instructions, or (b) the requirements set forth in Sections G2411.2.1, G2411.2.2, G2411.2.3, and G2415.5.

"G2411.2.1 Bonding jumper. Where the electric service for the individual installation is 200 amperes or less, the bonding jumper shall not be smaller than 6 AWG copper wire or 4 AWG aluminum or copper-clad aluminum wire, and shall be permanently connected to the grounding electrode system. Where the electric service for the individual installation is more than 200 amperes, the bonding jumper size shall be determined in accordance with Table E 3503.1, and shall be permanently connected to the grounding electrode system.

"G2411.2.2 Bonding clamp. The bonding jumper shall be connected to the gas piping system with a bonding clamp that is listed for the material of the bonding jumper and for the material of the component of the gas piping system to which the bonding clamp is attached. The bonding clamp shall be attached to the gas piping system at a point which is inside the building or structure in which the gas piping is installed, on the downstream side of the gas meter or regulator, in an unconcealed and readily accessible space, and as close as practicable to the point where the gas service enters the building or structure. The bonding clamp shall be attached to a segment of metallic fuel gas pipe which (a) is a component of the gas piping system, (b) is electrically continuous with all CSST components of the gas piping system, (c) is made of steel or wrought-iron, (d) complies with Section G2414.4.2 of this code and with all other applicable provisions of Section G2414 of this code, and (e) is not less than 3 inches (76 mm) in length. Neither the CSST nor the brass hexagonal nut on the CSST fitting shall be used as an attachment point for the bonding clamp.

"G2411.2.3 Prohibited uses. CSST shall not be supported on or by other electrically conductive systems including copper water pipe, electric power cables, air conditioning and heating ducts, communication cables and structural steel beams. Electrical wiring, including the bonding jumper, shall be supported and secured independently of the CSST so that it does not come in contact with the CSST."

(11) 2007 RCNYS Section G2415.5. For the purposes of applying the 2007 RCNYS in this State, the text of Section G2415.5 in Chapter 24 of the 2007 RCNYS shall be deemed to be amended and restated in its entirety, to include sections G2415.5 and G2415.5.1 and to read as follows:

"G2415.5 (404.5) Protection against physical damage. In concealed locations, where piping other than black or galvanized steel is installed through holes or notches in wood studs, joists, rafters or similar members less than 1.75 inches (44.45 mm) from the nearest edge of the member, the pipe shall be protected by shield plates. Such

shield plates shall comply with the requirements of Section G2415.5.1, shall cover the area of the pipe where the member is notched or bored, and shall extend a minimum of 4 inches (102 mm) above sole plates, below top plates and to each side of a stud, joist or rafter. The movement of piping made of corrugated stainless steel tubing (CSST) shall not be otherwise constrained by straps, clips or other support devices. In addition, where CSST is installed in a concealed location and parallel to any stud, joist, rafter, or similar member, the CSST shall be protected by shield plates in any area where the CSST is not (a) physically supported in a manner that ensures the CSST will always be at least 1.75 inches (44.45 mm) away from the nearest edge of any member or (b) encased in a protective metal pipe made of schedule 40 steel or iron pipe or in a protective pipe sleeve made of a material approved by the code enforcement official as the equivalent of schedule 40 steel or iron pipe. Such shield plates shall comply with the requirements of Section G2415.5.1, shall cover the area the CSST is located, and shall extend a minimum of 4 inches (102 mm) to each side of the CSST.

"G2415.5.1. Shield plates. In all cases, shield plates shall be certified or listed as complying with ANSI LC-1. In addition, in the case of piping made of CSST, shield plates shall be listed for use with the manufacturer's CSST system."

(12) 2007 RCNYS Section E3509.7. For the purposes of applying the 2007 RCNYS in this State, the text of Section E3509.7 in Chapter 35 of the 2007 RCNYS shall be deemed to be amended and restated in its entirety to read as follows:

"E3509.7 Bonding other metal piping. Where installed in or attached to a building or structure, metal piping systems likely to become energized shall be bonded to the service equipment enclosure, the grounded conductor at the service, the grounding electrode conductor where of sufficient size, or to the one or more grounding electrodes used. A piping system shall be considered to be likely to become energized if any equipment or appliance is connected to any portion of the piping system and to any electrical circuit(s). The bonding jumper shall be sized in accordance with Table E3808.12 using the rating of the circuit capable of energizing the piping. The equipment grounding conductor for the circuit that is capable of energizing the piping shall be permitted to serve as the bonding means. The points of attachment of the bonding jumper(s) shall be accessible.

"EXCEPTIONS:
"1. Interior metal water piping systems shall be bonded in accordance with Section E3509.6 of this code.
"2. Gas piping systems that contain no corrugated stainless steel tubing (CSST) shall be bonded in accordance with Section G2411.1 of this code.
"3. Gas piping systems that contain CSST shall be installed and bonded in accordance with Section G2411.2 of this code."

Subdivision (b) of section 1224.1 of title 19 NYCRR is amended to read as follows:

(b) Referenced standards. Certain published standards are denoted in the 2007 FGCNYS as incorporated by reference into 19 NYCRR Part 1222. Such standards are incorporated by reference into this Part 1224. Such standards are identified in the 2007 FGCNYS, and the names and addresses of the publishers of such standards from which copies of such standards may be obtained are specified in the 2007 FGCNYS. Such standards are available for public inspection and copying at the office of the New York State Department of State specified in subdivision (a) of this section. <u>In addition, the 2005 edition of standard NFPA 70, entitled "National Electrical Code" (said standard being hereinafter referred to as NFPA 70-2005) shall be deemed to be one of the standards incorporated by reference into this Part 1224. The name and address of the publisher of NFPA 70-2005 from which copies of said standard may be obtained are:</u>
<u>National Fire Protection Association</u>
<u>Batterymarch Park</u>
<u>Quincy, MA 02269.</u>
<u>NFPA 70-2005 is available for public inspection and copying at the office of the New York State Department of State specified in subdivision (a) of this section.</u>

Subdivision (c) of 1224.1 of Title 19 NYCRR is amended by adding new paragraphs (2), (3), and (4), to read as follows:

(2) 2007 FGCNYS Section 310.1. For the purposes of applying the 2007 FGCNYS in this State, Section 310.1 in Chapter 3 of the 2007 FGCNYS shall be deemed to be amended and restated in its entirety to read as follows:

"310.1 Gas pipe bonding - systems that contain no CSST. In the case of a gas piping system that contains no corrugated stainless steel tubing (CSST), each above-ground portion of the gas piping system that is likely to become energized shall be electrically continuous and bonded to an effective ground-fault current path. Gas piping shall be considered to be likely to become energized if any gas utilization equipment is connected to any portion of the gas piping system and to any electrical circuit(s). For the purposes of this Section 310.1, gas piping shall be considered to be bonded to an effective ground-fault current path if such gas piping is connected to gas utilization equipment that is connected to the equipment grounding conductor of the circuit supplying that equipment. Nothing in this Section 310.1 shall prohibit the bonding a gas piping system that contains no CSST in any manner described in Section 250.104(B) of NFPA 70-2005."

(3) 2007 FGCNYS Section 310.2. For the purposes of applying the 2007 FGCNYS in this State, a new Section 310.2 (to include sections 310.2, 310.2.1, 310.2.2, and 310.2.3) shall be deemed to be added to Chapter 3 of the 2007 FGCNYS, immediately following Section 310.1, said new Section 310.2 to read as follows:

“310.2 Gas pipe bonding - systems that contain CSST. A gas piping system that contains any corrugated stainless steel tubing (CSST) shall be electrically continuous and shall be bonded to the electrical service grounding electrode system at the point where the gas service enters the building or structure. No portion of the gas piping system shall be used as or considered to be a grounding electrode or a grounding electrode conductor. CSST shall be installed and bonded in accordance with this section 310.2, and the stricter of: (a) the requirements set forth in the CSST manufacturer’s installation instructions, or (b) the requirements set forth in Sections 310.2.1, 310.2.2, 310.2.3, and 404.5 of this code.

“310.2.1 Bonding jumper. Where the electric service for the individual installation is 200 amperes or less, the bonding jumper shall not be smaller than 6 AWG copper wire or 4 AWG aluminum or copper-clad aluminum wire, and shall be permanently connected to the grounding electrode system. Where the electric service for the individual installation is more than 200 amperes, the bonding jumper size shall be determined in accordance with Table 250.66 and Sections 250.66(A) through 250.66(C) of NFPA 70-2005, and shall be permanently connected to the grounding electrode system.

“310.2.2 Bonding clamp. The bonding jumper shall be connected to the gas piping system with a bonding clamp that is listed for the material of the bonding jumper and for the material of the component of the gas piping system to which the bonding clamp is attached. The bonding clamp shall be attached to the gas piping system at a point which is inside the building or structure in which the gas piping is installed, on the downstream side of the gas meter or regulator, in an unconcealed and readily accessible space, and as close as practicable to the point where the gas service enters the building or structure. The bonding clamp shall be attached to a segment of metallic fuel gas pipe which (a) is a component of the gas piping system, (b) is electrically continuous with all CSST components of the gas piping system, (c) is made of steel, wrought-iron, copper (if permitted by Section 403.4.3 of this code), or brass (if permitted by Section 403.4.3 of this code), or aluminum, (d) complies with the applicable provisions of Section 403.4 of this code and with all other applicable provisions of Section 403 of this code, and (e) is not less than 3 inches (76 mm) in length. Neither the CSST nor the brass hexagonal nut on the CSST fitting shall be used as an attachment point for the bonding clamp.

“310.2.3 Prohibited uses. CSST shall not be supported on or by other electrically conductive systems including copper water pipe, electric power cables, air conditioning and heating ducts, communication cables and structural steel beams. Electrical wiring, including the bonding conductor, shall be supported and secured independently of the CSST so that it does not come in contact with the CSST.”

(4) 2007 FGCNYS Section 404.5. For the purposes of applying the 2007 FGCNYS in this State, Section 404.5 in Chapter 4 of the 2007 FGCNYS shall be deemed to be amended and restated in its entirety, to include sections 404.5 and 404.5.1 and to read as follows:

"404.5 Protection against physical damage. In concealed locations, where piping other than black or galvanized steel is installed through holes or notches in wood studs, joists, rafters or similar members less than 1.75 inches (44.45 mm) from the nearest edge of the member, the pipe shall be protected by shield plates. Such shield plates shall comply with the requirements of Section 405.5.1, shall cover the area of the pipe where the member is notched or bored, and shall extend a minimum of 4 inches (102 mm) above sole plates, below top plates and to each side of a stud, joist or rafter. The movement of piping made of corrugated stainless steel tubing (CSST) shall not be otherwise constrained by straps, clips or other support devices. In addition, where CSST is installed in a concealed location and parallel to any stud, joist, rafter, or similar member, the CSST shall be protected by shield plates in any area where the CSST is not (a) physically supported in a manner that ensures the CSST will always be at least 1.75 inches (44.45 mm) away from the nearest edge of any member or (b) encased in a protective metal pipe made of schedule 40 steel or iron pipe or in a protective pipe sleeve made of a material approved by the code enforcement official as the equivalent of schedule 40 steel or iron pipe. Such shield plates shall comply with the requirements of Section 405.5.1, shall cover the area the CSST is located, and shall extend a minimum of 4 inches (102 mm) to each side of the CSST.

"405.5.1. Shield plates. In all cases, shield plates shall be certified or listed as complying with ANSI LC-1. In addition, in the case of piping made of CSST, shield plates shall be listed for use with the manufacturer's CSST system."

EFFECTIVE September 25, 2008

APPENDIX G

APPENDIX G – CO ALARM LAW

New York State CO Alarm Law Rule for Carbon Monoxide Alarms

Part 1225 of Title 19 of the Official Compilation of Codes, Rules and Regulations of the State of New York is amended by adding a new section 1225.2 to read as follows:

1225.2 Carbon monoxide alarms. Single and multiple station carbon monoxide alarms shall be installed and maintained in newly constructed dwelling units and in dwelling units offered for sale, as provided in this section.

(a) Where required. (1) One- and two-family dwellings and multiple single family dwellings (townhouses); and

(2) Dwelling units in buildings of Group R-2 occupancy classification owned as condominiums or cooperatives.

(b) Location of carbon monoxide alarms. At least one carbon monoxide alarm shall be provided in each dwelling unit. The required carbon monoxide alarm shall be installed in the immediate vicinity of bedroom(s) on the lowest floor level of the dwelling unit containing bedroom(s).

(c) Equipment and installation. Carbon monoxide alarms shall be listed and labeled as complying with UL 2034-2002 (Single and Multiple Station Carbon Monoxide Alarms, Second Edition, October 29, 1996 - with Revisions through and including June 28, 2002, published by Underwriters Laboratories, Inc.), shall be installed in accordance with the manufacturer's installation instructions, and shall conform with paragraphs (1) and (2) of this subdivision. This subdivision shall not preclude the installation of listed combination smoke/carbon monoxide alarms.

(1) Power source. Carbon monoxide alarms are permitted to be permanently connected to the building wiring system, connected by cord or plug to the wiring system, or battery operated. Where carbon monoxide alarms are permanently installed, they shall receive their primary power from a lighting circuit of the building wiring system, provided that such wiring system is served from a commercial source. Wiring shall be permanent and without a disconnecting switch other than as required for over current protection.

(2) Combination systems and supervisory service. Where carbon monoxide alarms are a component of a fire/burglar/carbon monoxide system, or alarms are monitored by an approved supervising station, a distinctive alarm signal shall be used to differentiate between the carbon monoxide alarms and other alarm system functions. Activation of a carbon monoxide alarm shall not activate a fire alarm signal. Carbon monoxide alarms shall be wired such that short circuits, open circuits, or any other ground-fault

will not interfere with monitoring for integrity of the fire warning system.

(d) Maintenance. Carbon monoxide alarms shall be maintained in conformance with the manufacturer's instructions. Where a carbon monoxide alarm receives primary or backup power from a battery, the alarm shall emit a signal when batteries are low. Where the battery is of a removable type, it shall be replaced in conformance with the manufacturer's instructions.

(e) Disabling of alarms. Required carbon monoxide alarms shall not be removed or disabled, except for replacement, service or repair purposes.

LOCAL LAWS
OF
THE CITY OF NEW YORK
FOR THE YEAR 2004

No. 7

Introduced by the Speaker (Council Member Miller) and Council Members Comrie, DeBlasio, Felder, Gennaro, Nelson, Quinn, Rivera, Serrano, Vann, Foster, Sears, Gentile, Gerson, Jackson, Martinez, Monserrate, Reed, Weprin, Liu, James, Lopez, Brewer, Koppell and Vallone Jr.

A LOCAL LAW

To amend the administrative code of the city of New York, in relation to requiring the installation of carbon monoxide detecting devices in buildings classified in occupancy groups G, H-2, J-1, J-2 and J-3.

Be it enacted by the Council as follows:

Section 1. Subchapter seventeen of chapter one of title twenty-seven of the administrative code of the city of New York is amended by adding a new article seven to read as follows:

Article 7

Carbon Monoxide Detecting Devices

§27-981.1 Definitions. For the purpose of this article: a. "Fossil fuel" shall mean coal, kerosene, oil, wood, fuel gases and other petroleum products.

b. "Fuel gases" shall include, but not be limited to, methane, natural gas, liquefied natural gas and manufactured fuel gases.

§27-981.2 Carbon monoxide detecting devices; where required. a. Every dwelling unit in a building within occupancy groups J-1, J-2 or J-3 where a fossil fuel-burning furnace or boiler is located, and every dwelling unit in a building that is in close proximity to a source of carbon monoxide, as such proximity is established by the rules promulgated by the commissioner in consultation with the fire department and the department of health and mental hygiene, shall be equipped with an operational carbon monoxide detecting device approved in accordance with the rules promulgated by the commissioner in consultation with the fire department and the department of health and mental hygiene, provided that there shall be installed at least one approved and operational carbon monoxide detecting device within fifteen feet of each room lawfully used for sleeping purposes. Such carbon monoxide detecting device may be combined with a smoke detecting device that complies with the provisions of this title and any applicable rules promulgated thereunder.

b. In every building classified in occupancy group G or occupancy group H-2, at least one approved and operational carbon monoxide detecting device shall be installed in accordance with rules promulgated by the commissioner in consultation with the fire department and the department of health and mental hygiene.

c. The provisions of this article shall apply retroactively to every building, in accordance with the provisions of subdivision a or subdivision b of this section, irrespective of when such building was constructed or a certificate of occupancy for such building was issued.

d. The provisions of this article may be enforced by the department, the fire department, the department of health and mental hygiene and the department of housing preservation and development.

§27-981.3 General requirements for carbon monoxide detecting devices. All carbon monoxide detecting devices required to be provided and installed pursuant to this article shall be of a type authorized by rules promulgated by the commissioner.

§2. Article eleven of subchapter two of chapter two of title twenty-seven of the administrative code of the city of New York is amended by adding new sections 27-2046.1 and 27-2046.2 to read as follows:

§27-2046.1. Duties of owner and occupant with respect to installation and maintenance of carbon monoxide detecting devices in class A multiple dwellings and private dwellings. a. As used in paragraphs two through six of

subdivision b of this section, the term "private dwelling" shall mean a dwelling unit in a one-family or two-family home which is occupied by a person or persons other than the owner of such unit or the owner's family.

b. It shall be the duty of the owner of a class A multiple dwelling and a private dwelling which is required to be equipped with one or more carbon monoxide detecting devices pursuant to article seven of subchapter seventeen of chapter one of this title to:

(1) provide and install one or more approved and operational carbon monoxide detecting devices in each dwelling unit;

(2) post a notice in a form approved by the commissioner in a common area of a Class A multiple dwelling and otherwise provide such notice to the occupants of a private dwelling informing the occupants of such dwelling that the owner is required by law to install one or more approved and operational carbon monoxide detecting devices in each dwelling unit in the dwelling, provided that an owner may choose to post or otherwise provide a single notice that complies with this provision as well as the provisions of paragraph two of subdivision a of section 27-2045 of this article;

(3) replace any carbon monoxide detecting device which has been stolen, removed, found missing or rendered inoperable during a prior occupancy of the dwelling unit and which has not been replaced by the prior occupant prior to the commencement of a new occupancy of a dwelling unit;

(4) replace within thirty calendar days after the receipt of written notice any such device which becomes inoperable within one year of the installation of such device due to a defect in the manufacture of such device and through no fault of the occupant of the dwelling unit;

(5) provide written information regarding the testing and maintenance of carbon monoxide detecting devices to at least one adult occupant of each dwelling unit including, but not limited to, general information concerning carbon monoxide poisoning and what to do if a carbon monoxide detecting device goes off. Such information may include material that is distributed by the manufacturer, material prepared by the department of buildings or material approved by the department of buildings; and

(6) keep such records as the commissioner shall prescribe relating to the installation and maintenance of carbon monoxide detecting devices in the building and make such records available to the commissioner upon request.

c. Notwithstanding the provisions of subdivision a of section 27-2005 and subdivision c of section 27-2006 of this chapter, it shall be the sole duty of the occupant of each dwelling unit in a class A multiple dwelling and the occupant of a dwelling unit in a private dwelling in which a carbon monoxide detecting device has been provided and installed by the owner pursuant to the provisions of article seven of subchapter seventeen of chapter one of this title to:

(1) keep and maintain such device in good repair; and

(2) replace any device which is either stolen, removed, missing or rendered inoperable during the occupancy of such dwelling unit.

d. Except as otherwise provided in paragraphs three and four of subdivision a of this section, an owner of a dwelling who has provided and installed a carbon monoxide detecting device in a dwelling unit pursuant to this section shall not be required to keep and maintain such device in good repair or to replace any such device which is stolen, removed, missing or rendered inoperable during the occupancy of such dwelling unit.

e. It shall be unlawful for any person to tamper with or render inoperable a carbon monoxide detecting device that is required under article seven of subchapter seventeen of chapter one of this title, except for replacing the batteries or for other maintenance purposes.

f. The occupant of a dwelling unit in which a carbon monoxide detecting device is newly installed or in which a carbon monoxide detecting device is installed by the owner as a result of such occupant's failure to maintain such device or where such device has been lost or damaged by such occupant shall reimburse the owner in the amount of twenty-five dollars for the cost of such work. Such occupant shall have one year from the date of installation to make such reimbursement.

g. The provisions of this section may be enforced by the department, the department of buildings, the fire department and the department of health and mental hygiene.

§27-2046.2 Duties of owner and occupant with respect to installation and maintenance of carbon monoxide detecting devices in class B multiple dwellings. a. It shall be the duty of the owner of a class B multiple dwelling which is required to be equipped with one or more carbon monoxide detecting devices pursuant to article seven of subchapter seventeen of chapter one of this title to:

(1) provide and install one or more approved and operational carbon monoxide detecting devices in each dwelling unit or in the alternative, provide and install a line-operated zoned carbon monoxide detecting system with central annunciation and central office tie-in for all public corridors and public spaces, pursuant to rules promulgated by the commissioner in consultation with the department of buildings and the fire department;

(2) keep and maintain carbon monoxide detecting devices in good repair;

(3) replace any carbon monoxide detecting device which has been stolen, removed, found missing or rendered inoperable prior to the commencement of a new occupancy of a dwelling unit;

(4) keep such records as the commissioner shall prescribe relating to the installation and maintenance of carbon monoxide detecting devices in the building and make such records available to the commissioner upon request.

b. It shall be unlawful for any person to tamper with or render inoperable a carbon monoxide detecting device that is required under article seven of subchapter seventeen of chapter one of this title, except for replacing the batteries or for other maintenance purposes.

c. The provisions of this section may be enforced by the department, the department of buildings, the fire department and the department of health and mental hygiene.

§3. This local law shall take effect on the one hundred eightieth day after it shall have been enacted into law, except that no later than forty-five days prior to such date, the commissioner of buildings and the commissioner of housing preservation and development, in consultation with the commissioner of health and mental hygiene and the fire commissioner, as is required by such law, shall take all actions necessary for its implementation, including the promulgation of rules.

THE CITY OF NEW YORK, OFFICE OF THE CITY CLERK, s.s.:

I hereby certify that the foregoing is a true copy of a local law of the City of New York, passed by the Council on April 21, 2004 and approved by the Mayor on May 5, 2004.

MICHAEL McSWEENEY, 1st Deputy & Acting City Clerk

CERTIFICATION PURSUANT TO MUNICIPAL HOME RULE LAW §27

Pursuant to the provisions of Municipal Home Rule Law §27, I hereby certify that the enclosed Local Law (Local Law 7 of 2004, Council Int. No. 4-A) contains the correct text and:

Received the following vote at the meeting of the New York City Council on April 21, 2004: 50 for, 0 against, 0 not voting.

Was signed by the Mayor on May 5, 2004.

Was returned to the City Clerk on May 6, 2004.

JEFFREY D. FRIEDLANDER, Acting Corporation Counsel

APPENDIX H

Properties & General Combustion Characteristics of Natural Gas

Pipeline natural gas is one of the most popular fuel choices today. It is called “natural gas” because it is found in the earth as a natural material generated as a result of decaying organic matter. Most pipeline natural gas is called “associated gas” because it is a co-product associated with the oil recovery process. However, other sources of supply include coal bed methane, landfill methane, non-associated gas directly recovered from gas drilling operations, imported re-gasified liquefied natural gas (LNG) and refinery gases. Pipeline natural gas varies in composition depending on the geographic location the gas is being utilized. In fact, one of the many positive attributes of pipeline natural gas is that it can be mixed and blended from various sources and delivered through the interstate pipeline system as a “combined product” sufficient for most end use applications.

However, if the composition of natural gas supplied within a distribution system varies significantly, adjustments to appliances and other devices may be required. Other adjustments that must be considered, although not an issue for most areas served by National Grid, is the effect of elevation on combustion as appliances are certified and tested at sea level and do not take into account the effects elevation has on measured gas / air density. Fortunately, in most cases, after the original installation and adjustment, further adjustments are not necessary if the appliance is installed and maintained properly in accordance with the Manufacturers recommendations and standard good industry practices.

Most pipeline natural gas supplied in commerce is composed of 80-95% methane which is the principal constitute of natural gas. Methane is the same substance produced via decay of organic matter in some swamps, sewers and landfills however, unlike gas from these sources pipeline natural gas contains other hydrocarbon and non-hydrocarbon constituents including:

- Ethane
- Propane
- Butane(s)
- Pentane(s)
- Hexane(s)
- Trace hydrocarbon constituents
- Carbon Dioxide
- Nitrogen
- Trace Sulfur Compounds including gas odorants
- Moisture

Important parameters that describe the combustion characteristics of pipeline gas that are calculated from the composition constituents include:

Gross Heating Value (also called the "higher heating value" or "heat content") – the amount of energy per standard cubic foot of gas transferred as heat from the complete, ideal combustion of the gas with air, at standard temperature, where all the water formed by the combustion reaction condenses to liquid.

Relative Density (ideal specific gravity) – the ratio of the specific weight of a gas to the specific weight of dry air at the same conditions of pressure and temperature. It is simply the average molecular weight of the gas divided by the average molecular weight of the gas.

Wobbe Index (also called the interchangeability factor) – a numerical value that is determined by dividing the square root of the relative density (a key orifice flow parameter) into the heat content (or Btu per standard cubic foot) of the gas. Basically, the Wobbe Index indicates the relative amount of energy that would flow through a small burner orifice jet.)

It should be noted that pipeline natural gas is non-toxic although sometimes listed as a "hazardous material" due to its flammability. Pipeline natural gas is also typically 40% lighter than air (if air is assumed to have a specific gravity of 1, natural gas would then have a specific gravity of approximately .6 depending on the composition as stated above).

Generally speaking, typical pipeline natural gas distributed in National Grid's service territory can have heating values in the 1010 – 1060 Btu/scf range with a specific gravity ranging from .58 to .62. This can result in a Wobbe Index range of approximately 1321 – 1360. It should be noted that gas compositional changes may occur and typically should not result in Wobbe Index variations in excess of +/- 4% of the typical adjustment gas, or historical supply at the time of installation. It is anticipated that delivered compositions will not vary above a maximum Wobbe Index of 1,400 and a heating value of 1,110 Btu/scf.

Due to possible variations in composition and resulting combustion parameters, it is important to follow the Manufacturers instructions for properly adjusting burners and setting appliances "on rate". Failure to do so may result in an over firing condition, combustion problems and lost efficiency. It is the responsibility of the installer to ensure appliances are installed correctly and properly adjusted for the gas received at the time of installation.

Pipeline natural gas used for combustion processes other than household appliances should consult and follow engineering & installation guidelines as to setting combustion devices "on-rate". Other applications including refueling stations, vehicle and stationary engines also need to consider the above mentioned potential variations in fuel composition and resulting combustion parameters.

It is important to note that all combustion devices should be maintained in proper working order and inspected regularly to ensure continued safe and efficient operation.

APPENDIX I

HARD CASE DIAPHRAM METERS

(For Indoor and Outdoor Applications)

Meter Class	METER TYPE	Manuf	A	B	C	D	E 1	E 2	REF DRAWING	WALL-CNTR OF SWIVL	SWIVL SIZE	PIPE SIZE
250	Metris 250TC	Sprague	7 3/4	11 1/8	6	7 3/4	-	-	A	7	20 LT	1 1/4
	AC250TC	American	6	13 7/8	8 1/2	9 5/8	-	-	A	7	20 LT	1 1/4
	R275TC	Rockwell	6	13 7/8	8 1/2	9 5/8	-	-	A	7	20 LT	1 1/4
400	400ATC (30-Lt)	Sprague	8 1/4	17 1/16	10 3/4	12 1/8	-	-	A	7	45 LT	1 1/4
	AL425TC (30-Lt)	American	8 1/4	14 7/8	10	10 3/4	-	-	A	7	45 LT	1 1/4
	R415TC (30-Lt)	Rockwell	8 1/4	14 7/8	9 3/8	11 1/8	-	-	A	8	45 LT	1 1/4
400	400ATC (45-Lt)	Sprague	8 1/4	17 1/16	10 3/4	12 1/8	-	-	A	7	45 LT	1 1/4
	AL425TC (45-Lt)	American	8 1/4	14 7/8	10	10 3/4	-	-	A	7	45 LT	1 1/4
	R415TC (45-Lt)	Rockwell	8 1/4	14 7/8	9 3/8	11 1/8	-	-	A	8	45 LT	1 1/4
600	AC630TC	American	8 1/4	15	10	10 1/2	-	-	A	7	45 LT	1 1/4
800	800ATC	Sprague	11	26 5/16	13 1/4	14 1/8	23 1/2	-	B	9	45 LT	1 1/2
	AL800TC	American	11	27	14 5/8	17 1/4	24 3/16	-	B	10	45 LT	1 1/2
	R750TC	Rockwell	11	27	14 5/8	17 1/4	24 3/16	-	B	10	45 LT	1 1/2
1000	1000ATC	Sprague	11	26 5/16	16 3/8	18	25	-	B	11	2 "	2"
	AL1000TC	American	11	27	13 3/8	14 1/4	23 1/2	-	B	9	2 "	2"
	R1000TC	Rockwell	11	27	14	14/34	23 3/4	-	B	10	2"	2"

NOTE: Meter class "400": NYC has 30-Lt connections
Long Island has 45-Lt connections

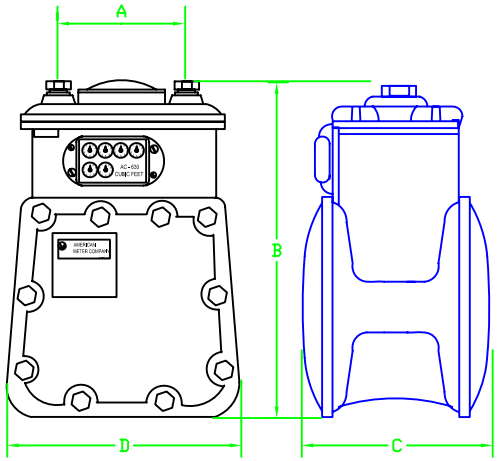

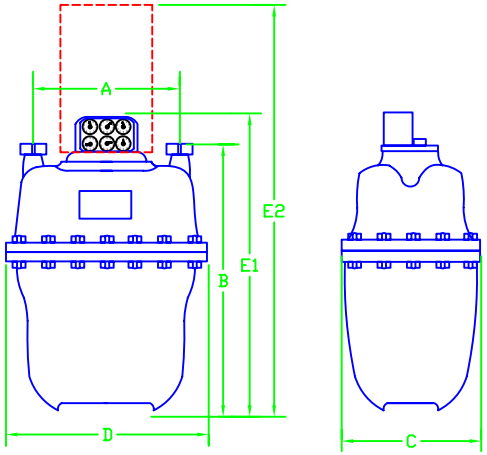

Meter Type	Mfg	A	B 1	B 2	C 1	C 2	Pipe Size
8CTC (non-ID)	Dresser	6 3/4	6 31/32	-	-	19 1/4	2
11CTC (non-ID)	Dresser	6 3/4	6 31/32	-	-	19 3/4	2
15CTC (non-ID)	Dresser	6 3/4	6 31/32	-	-	20 11/16	2
2MTC (non-ID)	Dresser	6 3/4	6 31/32	-	-	20 13/32	2
3MTC (non-ID)	Dresser	6 3/4	6 31/32	-	-	21 5/8	2
5MTC (non-ID)	Dresser	6 3/4	6 31/32	-	-	24 1/2	3
7MTC (non-ID)	Dresser	9 1/2	8 7/8	-	-	24 3/16	3
11MTC (non-ID)	Dresser	9 1/2	8 7/8	-	-	27 3/4	4
16MTC (non-ID)	Dresser	9 1/2	8 7/8	-	-	32 7/16	4
8C-ID (TC or nonTC)	Dresser	6 3/4	6 31/32	-	-	19 1/4	2
11C-ID (TC or nonTC)	Dresser	6 3/4	6 31/32	-	-	19 3/4	2
15C-ID (TC or nonTC)	Dresser	6 3/4	6 31/32	-	-	20 11/16	2
2M-ID (TC or nonTC)	Dresser	6 3/4	6 31/32	-	-	20 13/32	2
3M-ID (TC or nonTC)	Dresser	6 3/4	6 31/32	-	-	21 5/8	2
5M-ID (TC or nonTC)	Dresser	6 3/4	6 31/32	-	-	24 1/2	3
7M-ID (TC or nonTC)	Dresser	9 1/2	8 7/8	-	-	24 3/16	3
11M-ID (TC or nonTC)	Dresser	9 1/2	8 7/8	-	-	27 3/4	4
16M-ID (TC or nonTC)	Dresser	9 1/2	8 7/8	-	-	32 7/16	4
23M-ID (line mounted)	Dresser	9 1/2	8 7/8	-	-	32 3/16	4
38 M- ID	Dresser	18	18	-	-	36 3/4	6
56 M-ID	Dresser	21	18	-	-	40	8
9C - CMTC	American	6 3/4	6 31/32	-	-	19 1/4	2
1.5M - CMTC	American	6 3/4	6 31/32	-	-	20 13/32	2
3.5M - CMTC	American	6 3/4	6 31/32	-	-	21 5/8	2
7M - CMTC	American	9 1/2	8 7/8	-	-	24 3/16	3
11M - CMTC	American	9 1/2	8 7/8	-	-	27 3/4	4

Meters may be installed in a horizontal or vertical position. Vertical (top inlet) is preferred. Check for "Arrow" to indicating proper flow direction
If applicable, a restricting orifice should be installed at least 2 or 4 pipe diameters downstream of the meter. Before installing, remove plastic end caps and check for free rotation of impellers. Do not put meter under strain at inlet and outlet flange connections and apply no more than 80 FT-LBS of torque when tightening flange bolts. Add oil to all 3 oil reservoirs to the center of the oil level indicator. "Do Not Overfill"

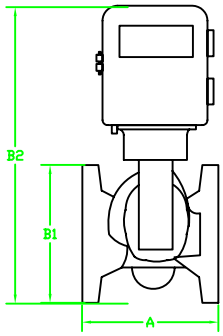

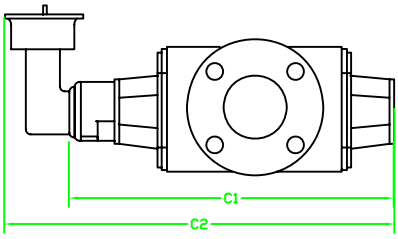

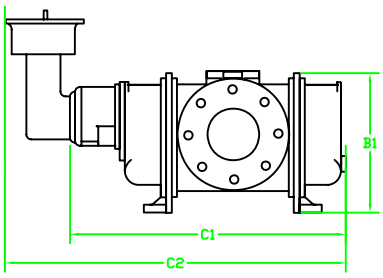

SENSUS/ROCKWELL TURBINE METERS

Meter					Inlet
Size/Type	**A**	**B1**	**B2**	**C**	**Pipe Size**
		Dimensions (inches)			
4"AAT18	9	14 3/16	23 11/16	14	4
4"AAT27	9	14 3/16	23 11/16	14	4
6"AAT35	11	14 3/16	22 1/2	16	6
6"AAT57	11	14 3/16	22 1/2	16	6
8"AAT60	13 1/2	19 11/16	29 3/16	21	8
8"AAT90	11	17 3/16	26 11/16	16	8
12"AAT140	13 1/2	19 11/16	29 3/16	21	12
12"AAT230	19	25 3/16	37 11/16	30	12
4"AAT18 (720#)	10 3/4	12 11/16	23 11/16	14	4
4"AAT27 (720#)	10 3/4	12 11/16	23 11/16	14	4
6"AAT35 (720#)	14	15 1/8	26 11/16	22 1/2	6
6"AAT57 (720#)	14	15 1/8	26 11/16	22 1/2	6
8"AAT60 (720#)	13 1/2	19 11/16	29 3/16	27 14	8
8"AAT90 (720#)	11	17 3/16	26 11/16	27 14	8
12"AAT140 (720#)	13 1/2	19 11/16	29 3/16	32 1/2	12
12"AAT230 (720#)	19	25 3/16	37 11/16	32 1/2	12

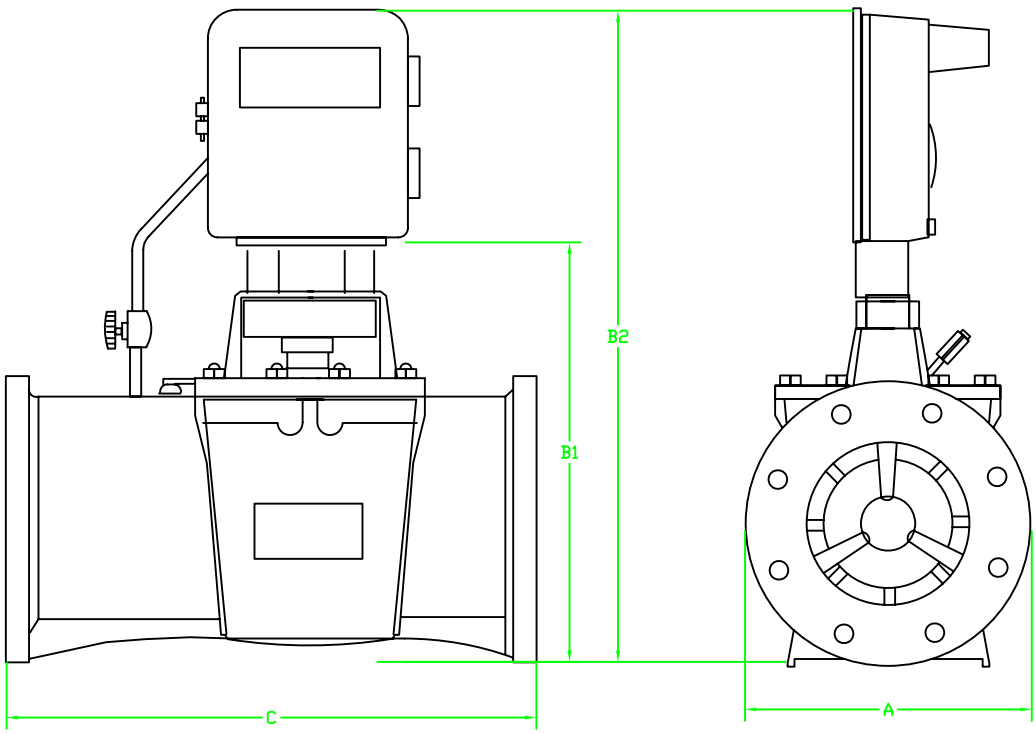

APPENDIX J

INDEX OF MOST FREQUENTLY USED STANDARDS: NOTE "–LI" ARE FOR <u>LONG ISLAND AND THE ROCKAWAYS ONLY, "…-NYC" ARE FOR BOTH TERRITORIES</u>

MTRS-6060-LI-MA-NH-NYC	INSTALLATION OF PROTECTION POSTS
MTRS-6075-LI	MULTIMETER INSTALLATION OF HARD CASE METERS
MTRS-6085-LI	TYPICAL MULTIMETER CONFIGURATION FOR 250, 400, 800 & 1000 METERS
MTRS-6095-LI	OUTDOOR MULTIPLE METER HEADERS FOR CLASS 250 METERS
MTRS-6135-LI	LP MAIN/LP METERING FOR 3M OR 7M METER
MTRS-6140-LI-NYC	SINGLE METER AND REGULATOR FOR OUTSIDE SET 15-124 PSIG INLETS, 250 & 400 METERS ½" AND ¾" DIAMETER SERVICES
MTRS-6142-LI-NYC	SINGLE METER AND REGULATOR FOR OUTSIDE SET 15-124 PSIG INLETS, 250 & 400 METERS 1" AND 1-1/4" DIAMETER SERVICES
MTRS-6145-LI	LP MAIN/LP METERING FOR 3M AND 7M HORIZONTAL ROTARY GAS METER – OUTSIDE LOCATIONS
MTRS-6185-LI	OUTDOOR METER SETS CLASS 800/1000, LP-124 PSIG INLET SERVICES – LP AND ½ PSIG DELIVERY PRESSURE
MTRS-6215-LI	TYPICAL MULTIMETER CONFIGURATIONS FOR CLASS 250, 400, 800 AND 1000 METERS WITH SINGLE REGULATOR
MTRS-6255-LI	HP MAIN/LP, ½ PSIG AND 1 PSIG METERING FOR 8C, 1.5M, 3M OR 7M VERTICAL ROTARY GAS METER
MTRS-6265-LI	HP MAIN/LP, ½ PSIG AND 1 PSIG METERING FOR 8C, 1.5M, 3M OR 7M HORIZONTAL ROTARY GAS METER
MTRS-6335-LI	OUTDOOR GAS METER CLASS 250/400 WITH BYPASS
MTRS-6385-LI	8C, 1.5M, 3M & 7M HP METER, VERTICAL POSITION
MTRS-6505-LI	CONCRETE FOUNDATIONS AND/OR FOOTINGS FOR GAS ROTARY GAS METER HEADERS – OUTDOOR LOCATION
MTRS-6545-LI	GENERAL NOTES FOR ROTARY GAS METERS
MTRS-6616-LI-MA-NH-NYC	8C – 3M PREFABRICATED HEADER 800 – 3,000 SCFH
MTRS-6617-LI-MA-NH-NYC	5M AND 7M PREFABRIATED METER HEADER UP TO 7,000 SCFH
SERV-6225-LI-NYC	OUTDOOR LOCATION FOR RISERS AND REGULATOR VENT TERMINUS
000-0000	GENERATOR INSTALLATION USING 1 METER/2 REGULATORS

DISCLAIMER: The standards with the "-LI" suffix are for Long Island and the Rockaways only. The standards that include "NYC" in the suffix are valid in New York City as well. These standards are current as of December 2005. They may be revised at any time. It is up to the installing Contractor to verify the latest edition with National Grid's Project Manager, Gas Customer Service or Field Operations Representative.

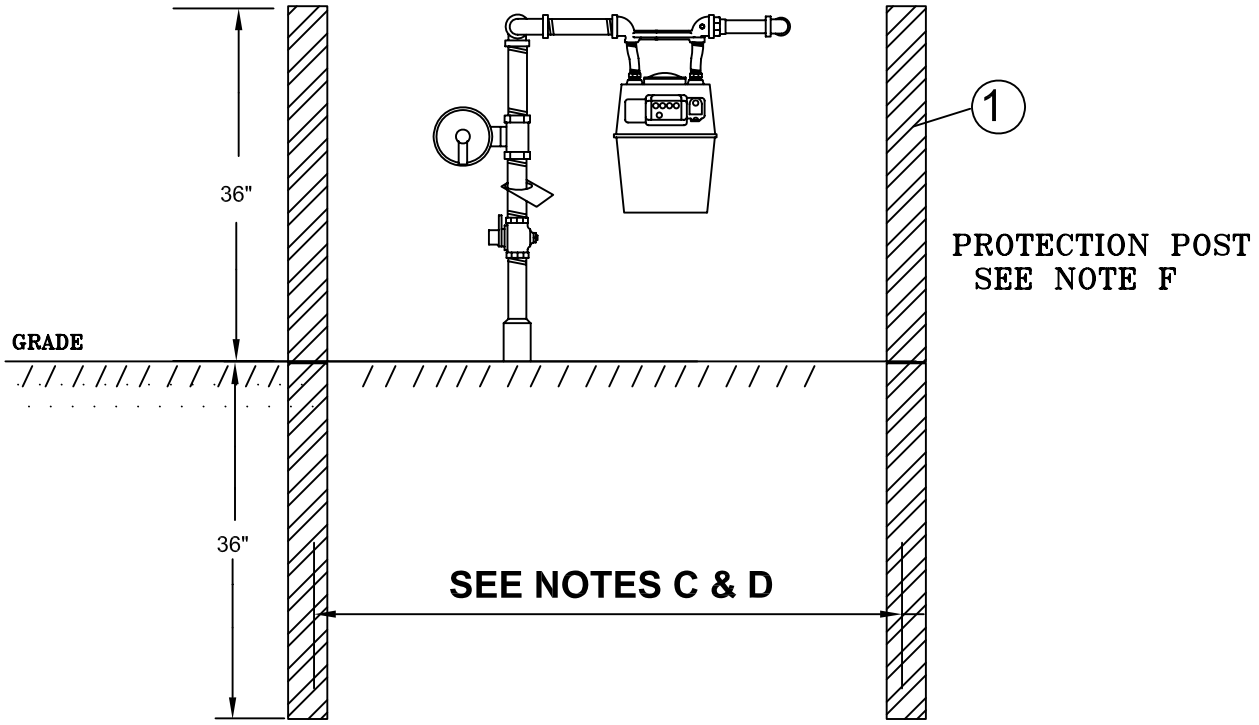

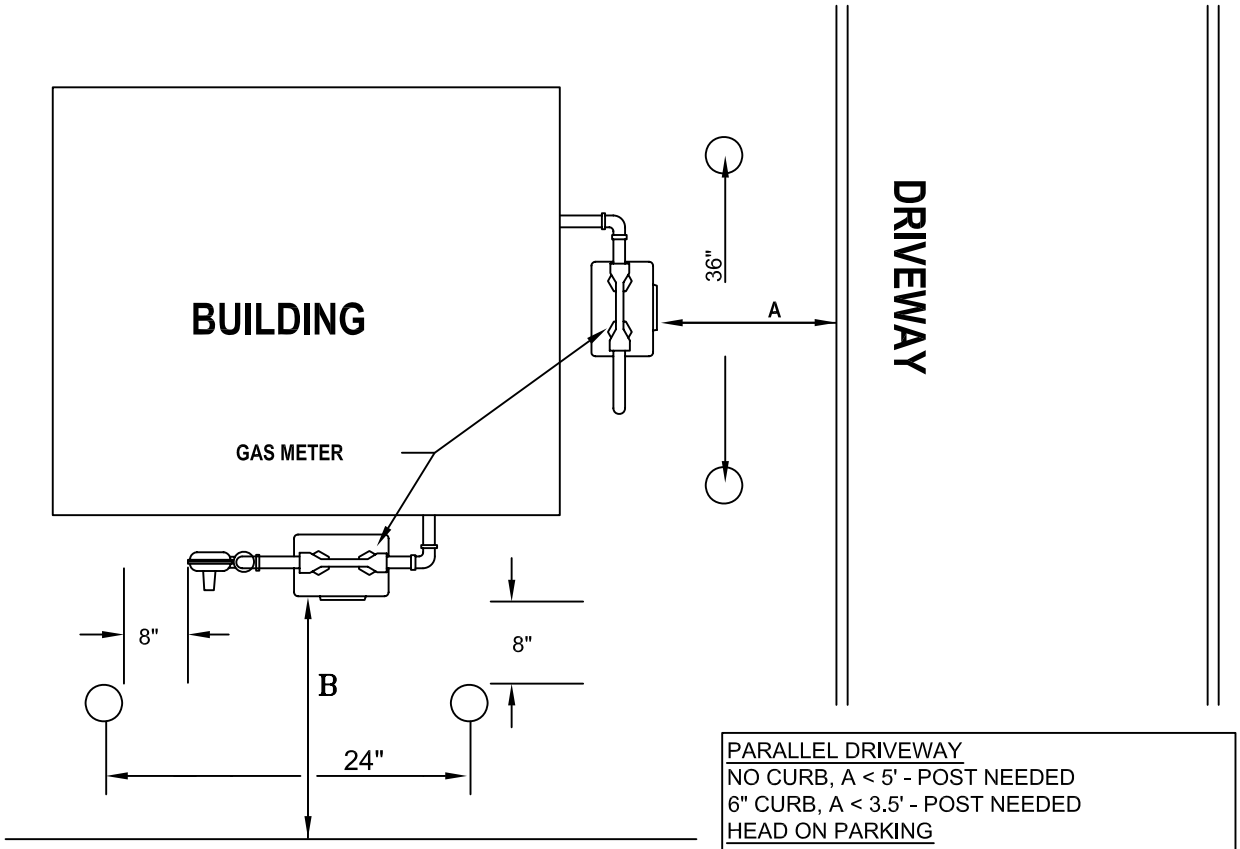

PARALLEL DRIVEWAY
NO CURB, A < 5' - POST NEEDED
6" CURB, A < 3.5' - POST NEEDED
HEAD ON PARKING
NO CURB, B < 15' - POSTS NEEDED
6" CURB, B < 10' POSTS NEEDED

HEAD ON PARKING AREA

nationalgrid

LI–MA–NH–NYC

INSTALLATION OF PROTECTION POST OUTSIDE METER SETS

REVISIONS: ADDED 4.5" POST AS ALTERNATE

DATE: 07/01/2003	EFFECTIVE DATE: 01/17/2006
DESIGN: R. McLOUGHLIN	STD. DWG. NO. **MTRS-6060**
DRAWN: PG	

NOTES:

A. WHERE PRACTICAL, A METER AND REGULATOR ASSEMBLY SHOULD BE INSTALLED IN AN AREA AWAY FROM VEHICULAR TRAFFIC AND OTHER POTENTIAL HAZARDS.

B. A PROTECTION POST SHOULD BE INSTALLED WHENEVER THE METER AND REGULATOR ASSEMBLY IS REASONABLY SUBJECT TO DAMAGE.

C. A PROTECTION POST SHALL BE INSTALLED WHEN THE METER AND REGULATOR ASSEMBLY IS PARALLEL TO AND WITHIN 5 FEET OF A DRIVEWAY AND NO OTHER MEANS OF PERMANENT PROTECTION EXISTS. IF THE DRIVEWAY HAS A CURB OR RETAINING WALL WITH A MINIMUM HEIGHT OF 6 INCHES, THIS DISTANCE IS REDUCED TO 3.5 FEET. THE MINIMUM SPACING OF THE POSTS IS 36 INCHES.

D. A PROTECTION POST SHALL BE INSTALLED WHERE A METER OR REGULATOR IS PERPENDICULAR TO AND WITHIN 15 FEET OF A DRIVEWAY, HEAD-ON OR ANGLE PARKING AREA. IF THE DRIVEWAY HAS A CURB, TIRE STOP OR RETAINING WALL WITH A MINIMUM HEIGHT OF 6 INCHES, THIS DISTANCE IS REDUCED TO 10 FEET. THE MINIMUM SPACING FOR POSTS IS 24 INCHES.

E. THE PROTECTION POSTS SHOULD MAINTAIN A MINIMUM OF 8 INCHES OF CLEARANCE AROUND THE METER AND REGULATOR.

F. THE POST SHALL BE 3-1/2 INCHES OD MINIMUM STEEL PAINTED OR GALVANIZED, AND MINIMUM 5 FEET IN LENGTH. IF POST IS PURCHASED NON STOCK WITHOUT CONCRETE, FILL WITH CONCRETE (ITEM 2).

G. THE POST SHOULD BE SET 36 INCHES ABOVE AND 36 INCHES BELOW GRADE. ALTERNATES ARE PERMISSIBLE IF THE ABOVE MATERIAL IS NOT IN STOCK. OBTAIN APPROVAL FROM YOUR SECTION MANAGER OR CHECK WITH GAS ENGINEERING IF YOU ARE UNCERTAIN.

H. FOR CERTAIN COMMERCIAL AND INDUSTRIAL APPLICATIONS, ADDITIONAL PROTECTION MAY BE REQUIRED IN EXCESS OF THIS STANDARD.

2	CONCRETE – READY MIX 40 LB. BAG (SEE NOTE F)	00118021
1	POST 3.5” O.D. 6’ LONG – CONCRETE FILLED - PRIMED COATED OR POST 4.5” O.D. 5’ LONG GALVANIZED 0.237” WALL – **NOT CONCRETE FILLED**	00301033 00301828
NO.	**ITEM**	**CODE No.**

BILL OF MATERIAL

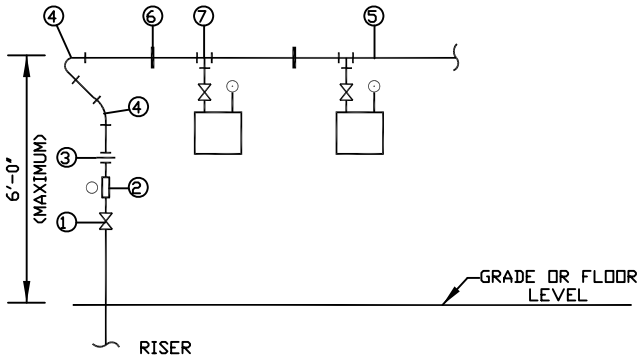

(A) TWO OR THREE METERS MAXIMUM MOUNTED IN A SINGLE TIER AND SUPPLIED BY A SINGLE REGULATOR (CLASS 175 AND 250)

REFERENCE DRAWINGS:
MTRS-6095
MTRS-6105

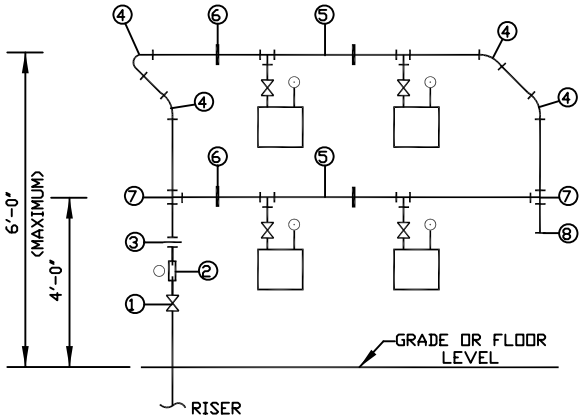

PREFERRED METHOD

(B) MULTIMETER "STACKED" FOR TWO OR MORE METERS (CLASS 250, 400, 800 AND 1000)

REFERENCE DRAWINGS:
MTRS-6215 (SINGLE REGULATOR)
MTRS-6225 (DUAL REGULATOR)
(FOR INSIDE SETS, CLASS 175 AND 250)

ALTERNATE METHOD

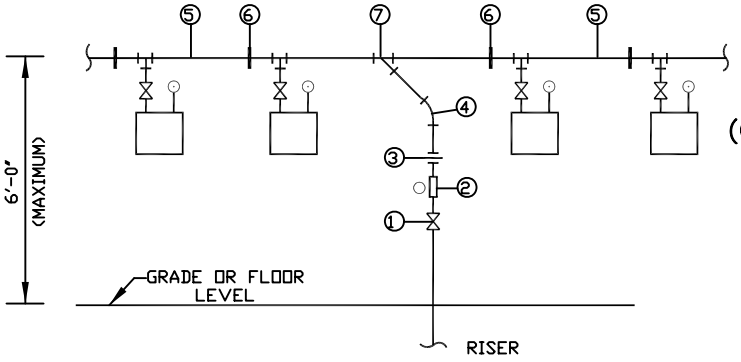

(C) ALTERNATE INSTALLATION FOR TWO TO FOUR METERS MAXIMUM T-CONFIGURATION (CLASS 250, 400, 800 AND 1000)

REFERENCE DRAWINGS:
MTRS-6085 (SINGLE REGULATOR)

nationalgrid

LI

MULTIMETER INSTALLATION HARD CASE METERS

REVISIONS: ELIMINATED MULTI SINGLE ROW SET UP	DATE: 7/1/2003	EFFECTIVE DATE: 11/25/2004	
	DESIGN: MLoP	STD. DWG. NO.	MTRS-6075
	DRAWN: MLoP		

ITEM	DESCRIPTION
1	VALVE (SCREW TYPE OR FLANGE)
2	SERVICE REGULATOR
3	UNION
4	90° BEND ELBOW
5	PIPE
6	SUPPORTS-PIPE,ROD OR HANGERS
7	TEE
8	DRIP LEG WITH CAP

NOTES:

1. THIS STANDARD IS PROVIDED TO INDICATE THE AVAILABLE METERING STANDARDS FOR HANDLING COMMERCIAL CUSTOMERS HAVING MULTIPLE HARD CASE METERS.

2. INSIDE METER SETS SHALL ONLY BE INSTALLED WHEN, IN THE COMPANIES OPINION, AN OUTSIDE SET IS NOT PRACTICAL. INSIDE METER SETS SHALL NOT BE INSTALLED ON 99 AND 124 P.S.I. GAS SERVICE.

3. REFER TO CONSTRUCTION STANDARD MTRS-6215 FOR ADDITIONAL REQUIREMENTS AND NOTES ON TYPICAL MULTIMETER SET INSTALLATIONS. **THE PROPER MANIFOLD PIPING SIZES ARE ALSO PROVIDED ON A TABLE IN MTRS-6215.**

4. VENT PIPING SHALL BE INSTALLED PER SERV-6225.

5. THE EXACT LAYOUT, BILL OF MATERIAL AND ADDITIONAL NOTES CAN BE FOUND ON THE APPROPRIATE REFERENCED CONSTRUCTION STANDARD.

6. DUAL REGULATORS CAN BE INSTALLED TO OBTAIN THE REQUIRED CAPACITY (WITH GAS ENGINEERING'S APPROVAL) THEY CAN ALSO BE USED WHEN CONTINUITY OF SERVICE IS A PRIORITY AS AGREED TO BY NATIONAL GRID GAS SALES AND GAS ENGINEERING.

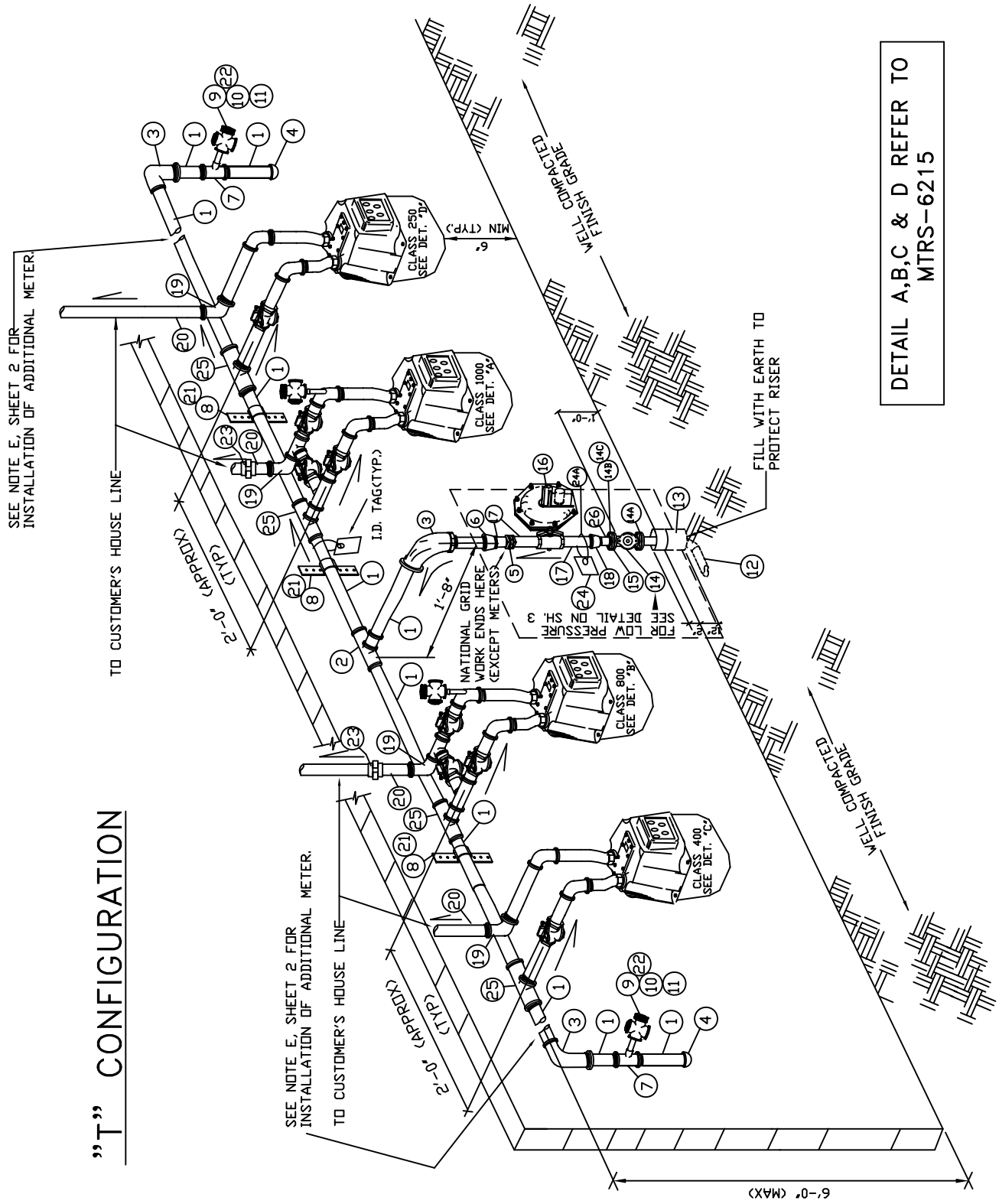

nationalgrid

LONG ISLAND

TYPICAL MULTIMETER CONFIGURATION FOR CLASS 250, 400, 800 AND 1000 WITH SINGLE AND DUAL REGULATORS

REVISIONS: ADDED UNION ON OUTLET PIPING WITH BYPASS
ADDED BRASS ID TAGS

DATE: 07/01/2003	EFFECTIVE DATE: 11/25/2004
DESIGN: GJK	STD. DWG.
DRAWN: MLoP	NO. **MTRS-6085**

NOTES

A. NATIONAL GRID WILL SUPPLY AND INSTALL ITEMS 12 THRU 18 AND ITEMS 22 THRU 24A.
B. SEE MTRS – 6215 FOR DIFFERENT METER HEADER PIPE SIZES.
C. FOR ITEM ID'S FOR ITEMS 27 THRU 43 ON SEE SHEETS 4 THRU 7 FOR APPROPRIATE METER CLASS.
D. FOR HIGH AND LOW PRESSURE INSTALLATIONS; USE A THREADED TYPE VALVE WHEN THE OUTLET OF RISER IS 1 ¼" AND A FLANGE VALVE WITH GASKETS AND ETC. WHEN THE RISER OUTLET IS 2" OR LARGER .
E. ADDITIONAL METER SETS CAN BE ADDED BY THE USE OF A FULL TEE (ITEM 25). SEE SHEET 1.
F. FOR ADDITIONAL NOTES SEE MTRS- 6215.
G. **CUSTOMER TO INSTALL BRASS OR ALUMINUM PERMANENT ID TAG ON EACH METER STAMPED OR ENGRAVED WITH STORE # / APARTMENT NUMBER/ UNIT # OR ADDRESS.**
H. DO NOT EXCEED 3 METERS IN ONE BRANCH. AFTER 3 METERS, INSTALL A LOOPED PIPING HEADER AS SHOWN IN MTRS-6215.

LEGEND :
+ - AS REQUIRED
++ - TO BE SUPPLIED BY FIELD OPERATIONS
* * - SUPPLIED BY CUSTOMER

26	NIPPLE – AS REQUIRED	+	NAT. GRID
25	TEE: 1 PER METER – SIZE AS REQUIRED (SEE DET. A,B,C,D, MTRS-6215)	+	* *
24A	STRIP – 14" – SELF LOCKING - NYLON	1	101003
24	TAG – GAS SERVICE LOCATION (CPR TAG)	1	301728
23	UNION – GALVANIZED, HOUSE LINE SIZE	+	* *
22	GAS SNAPLOCK	2	136506
21	SUPPORT PIPE OR ROD – 1" (OPTION)	+	* *
20	HOUSE LINE – SIZE AND QUANTITY AS REQ'D	+	* *
19	ELBOW – SIZE AND QUANTITY AS REQ'D	+	* *
18	REDUCER (IF REQUIRED)	1	NAT. GRID
17	NIPPLE	+	NAT. GRID
16	REGULATOR – 1 ¼" OR 2" – RELIEF / MONITOR	1	*
15	GASKET RING	1	NAT. GRID
14C	FLANGE – WELD NECK (FOR FLANGED TYPE VALVE ONLY)	2	NAT. GRID
14B	BOLT – 5/8" X 2 ¾" A3 07– MACHINE	8	309303
14A	GASKET – INSULATED FLANGE KIT	1	NAT. GRID
14	VALVE (SEE #4 BELOW)	1	NAT. GRID
13	SLEEVE – PIPE – PLASTIC OR EQUIVALENT	1	NAT. GRID
12	RISER – SERVICE (PRIMED & PAINTED) – SIZE AS REQUIRED	1	NAT. GRID
11	PLUG- 3 / 4" – THREADED	2	* *
10	METER COCK – 3 /4" – LOCKWING	2	* *
9	NIPPLE – ¾" X 3"	2	* *
8	CHANNEL – 1 5 / 8"UNISTRUT W/CLAMP (SEE ITEM 21)	+	* *
7	TEE – BULL – SIZE AS REQUIRED	2	* *
6	REDUCER (IF REQUIRED)	1	* *
5	UNION – INSULATED (ONLY IF SCREWED VALVE IS USED AND SERVICE IS STEEL)	1	* *
4	CAP	2	* *
3	ELBOW – 90 DEGREE	3	* *
2	TEE – (EQUAL TO SIZE OF HEADER)	1	* *
1	PIPE – AND LENGTH AS REQ'D (REFER TO NOTE C)	+	* *
			4 METER SETS
No.	**ITEM**		**NAT. GRID. CODE No.**

BILL OF MATERIAL

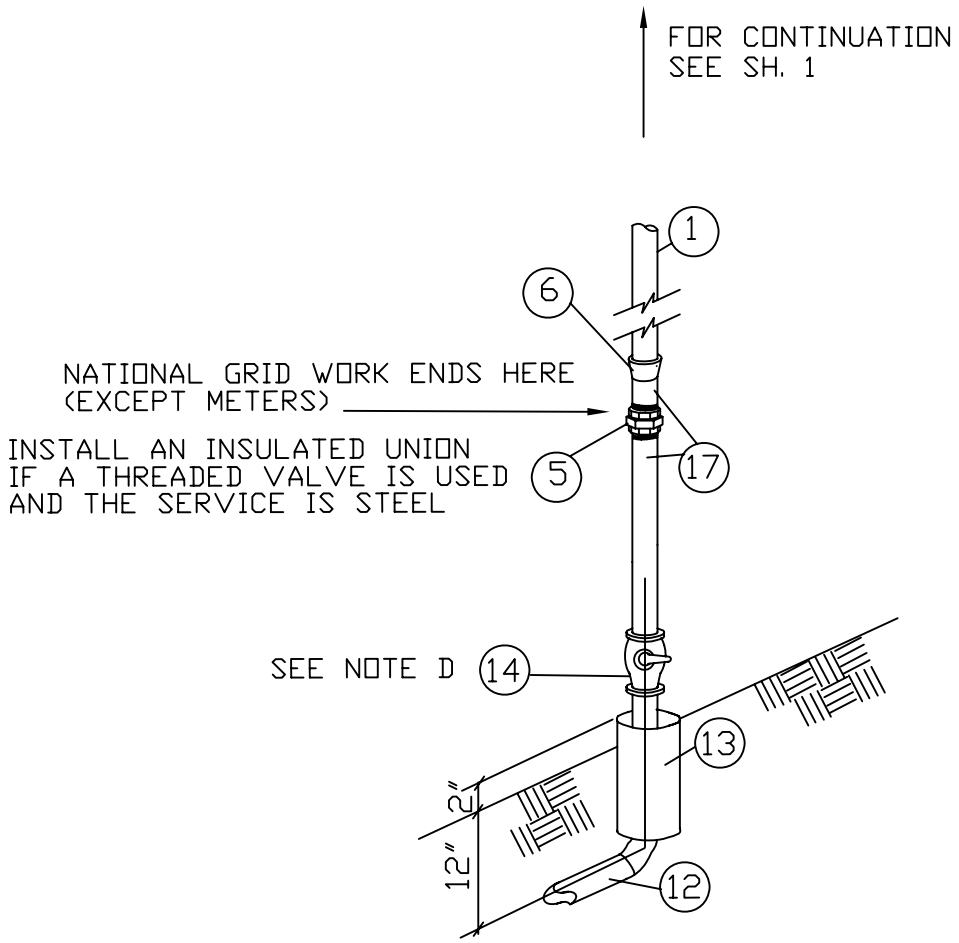

RISER CONFIGURATION
FOR LOW PRESSURE SERVICE

SEE SHEET 2 OF 5 FOR BILL OF MATERIAL

"T" CONFIGURATION
DUAL REGULATORS

SEE SHEET 1 FOR
ADDITIONAL METER
INSTALLATIONS

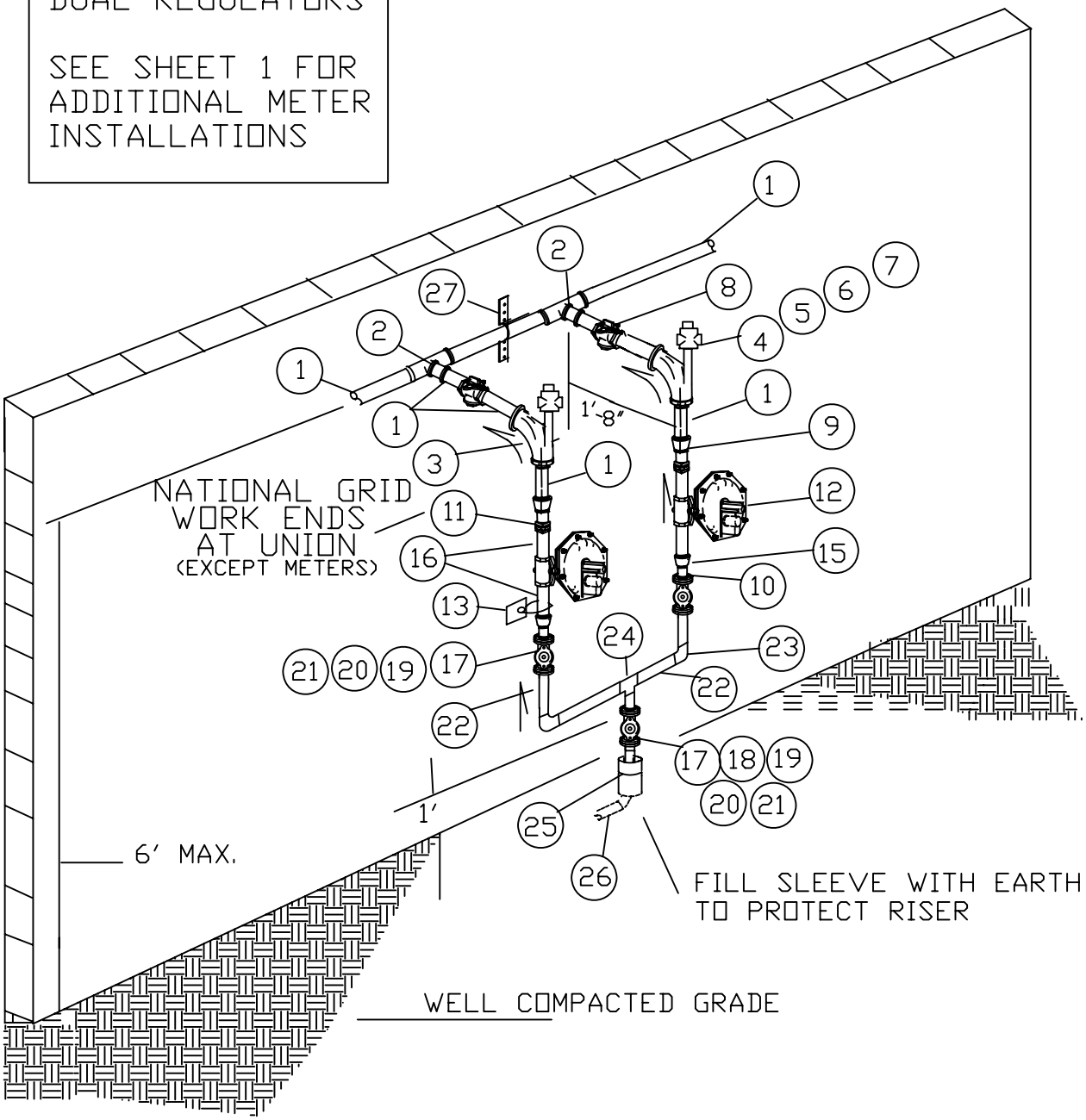

NOTES

1. SEE SHEET 3 OF MTRS-6215 FOR DIFFERENT METER HEADER PIPE SIZES.

2. FOR ADDITIONAL NOTES REGARDING METER HEADER CONFIGURATIONS SEE MTRS-6215.

3. PARALLEL REGULATORS ARE TO BE INSTALLED ONLY WHEN CONTINUITY OF SUPPLY IS A PRIORITY FACTOR. BOTH FIELD OPERATIONS AND GAS CONSTRUCTION MUST AGREE ON FINAL DESIGN PRIOR TO GIVING CUSTOMER APPROVAL. ALSO SEE NOTE I ON MTRS-6545.

4. USE A SCREW TYPE VALVE FOR 1 ¼" RISER AND A FLANGE TYPE VALVE FOR 2" RISERS. (ITEM 17). IF ITEM 17 IS A SCREW VALVE ITEMS 18, 19, 20 AND 21 IS NOT REQUIRED.

* SEE GENG-2010 FOR PROPER REGULATOR , SELECTION AND SIZING
\+ AS REQUIRED
* * TO BE SUPPLIED BY CUSTOMER

No.	ITEM	NATIONAL GRID CODE No.	
27	1 5/8" STRUT CHANNEL WITH CLAMP	+	* *
26	RISER – SERVICE – SIZE AS REQUIRED	1	NATIONAL GRID
25	SLEEVE – PIPE PLASTIC OR EQUIVALENT	1	NATIONAL GRID
24	TEE 3WAY – SIZE AS REQUIRED	1	
23	ELBOW 90 DEG. – SIZE AS REQUIRED	2	NATIONAL GRID
22	NIPPLE – SIZE AS REQUIRED	+	
21	FLANGE – SIZE AS REQUIRED	6	
20	GASKET – SIZE AS REQUIRED	5	
19	BOLTS – 5/8" X 2 ¾"	24	NATIONAL GRID
18	GASKET – INSULATED – SIZE AS REQUIRED	1	
17	VALVE – SIZE AS REQUIRED (SEE NOTE 4)	3	
16	NIPPLE – SIZE AS REQUIRED	+	NATIONAL GRID
15	REDUCER – SIZE AS REQUIRED	2	NATIONAL GRID
14	STRAP – SELF LOCKING	2	101003
13	TAG – GAS SERVICE LOCATION	1	301728
12	REGULATOR – 1-1/4 " OR 2" RELIEF / MONITOR	2	*
11	UNION – IF REQUIRED	2	NATIONAL GRID
10	NIPPLE – SIZE AND LENGTH AS REQUIRED	2	NATIONAL GRID
9	REDUCER – IF REQUIRED	2	* *
8	VALVE – SCREW – SIZE EQUAL TO HEADER DIAMETER	2	* *
7	GAS SNAP LOCK	2	136506
6	PLUG – ¾" SCREW	2	* *
5	NIPPLE ¾" X 3"	2	* *
4	VALVE – LOCKWING ¾"	2	* *
3	TEE – HEEL SIZE X ¾"	2	* *
2	TEE - 3 - WAY – SIZE AS REQUIRED	2	* *
1	PIPE – SIZE AND LENGTH AS REQUIRED	+	* *

BILL OF MATERIAL

NOTE: When 3 meters are to be installed which has a maximum load of 750 Cubic Feet per Hour, the manifolds shall be a minimum of 1 1/4" in diameter. See note I

HIGH PRESSURE

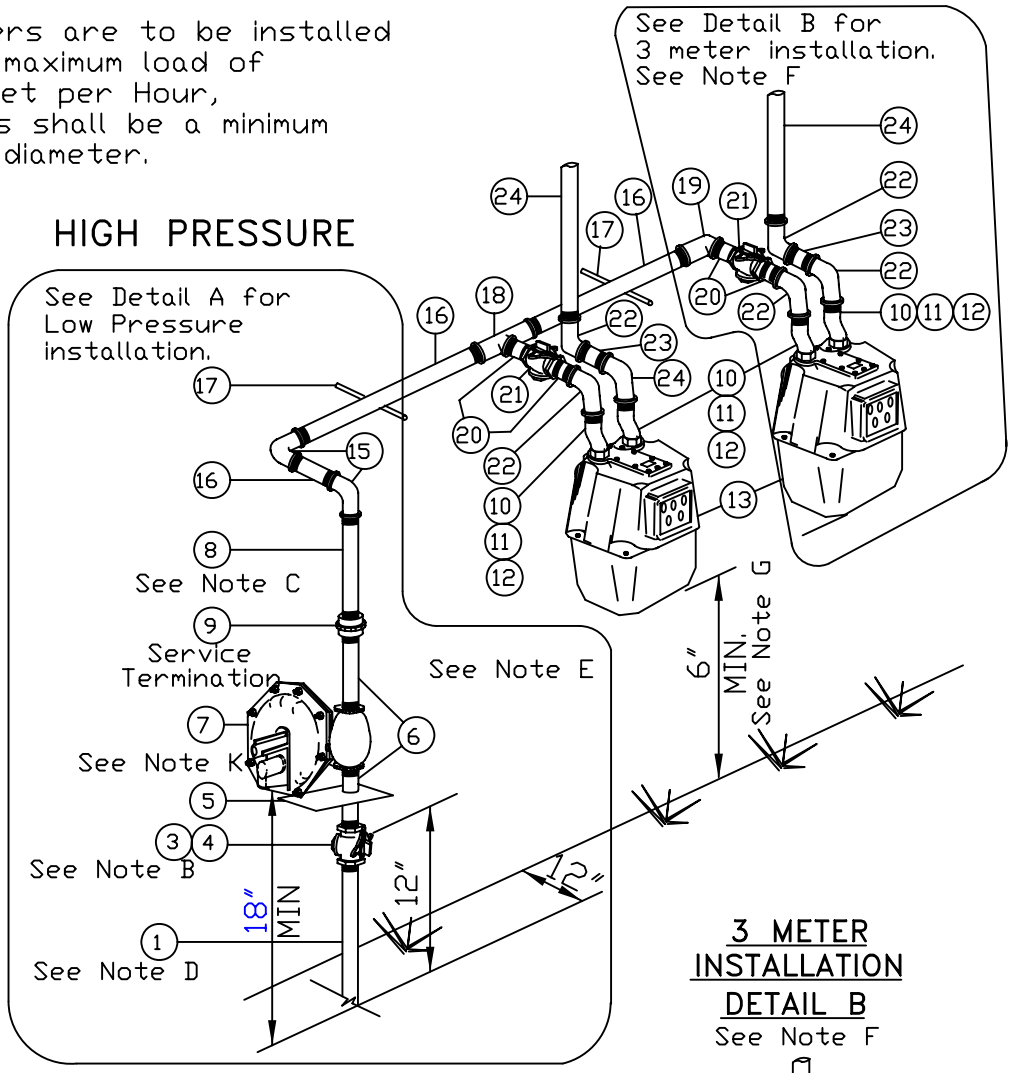

LOW PRESSURE INSTALLATION

DETAIL A

See Notes A and C

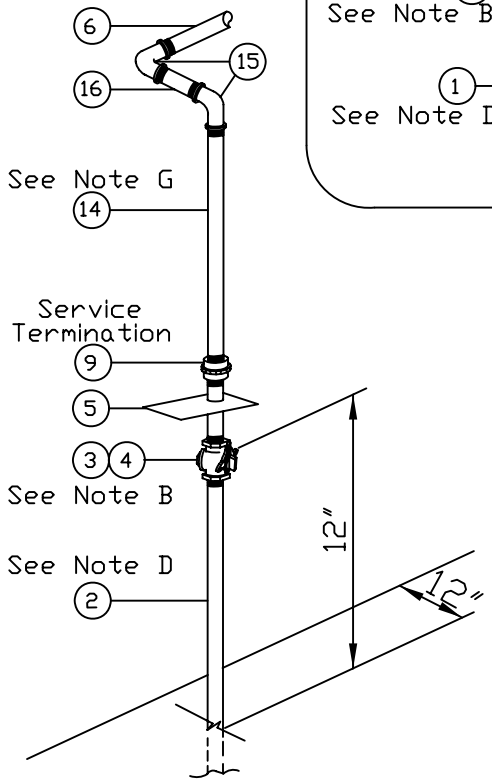

3 METER INSTALLATION

DETAIL B

See Note F

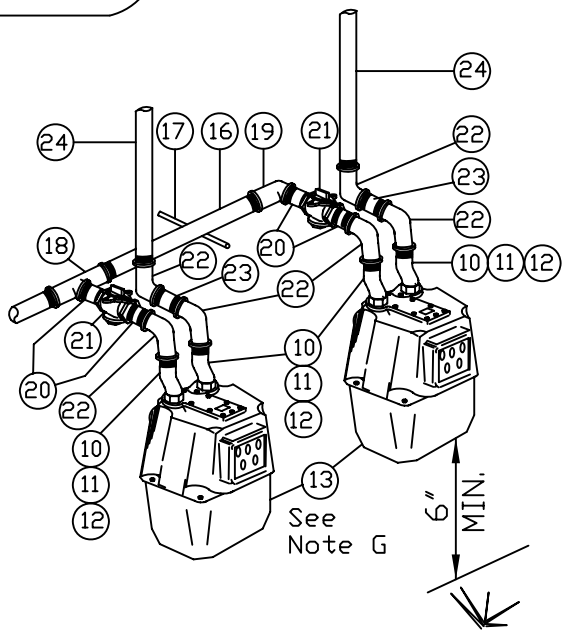

nationalgrid

LONG ISLAND

OUTDOOR MULTIPLE METER HEADERS FOR CLASS 175 OR 250 C.F.H. METERS

REVISIONS: CHANGED MINIMUM VENT HEIGHT TO 18" ON SHEET 1. REVISED NOTES H AND K ON SHEET 2.

DATE: 07/01/2003	EFFECTIVE DATE: 05/01/2006
DESIGN: MLoP	STD. DWG. NO. **MTRS-6095**
DRAWN: MLoP	

NOTES

A. NATIONAL GRID SHALL SUPPLY AND INSTALL ITEMS 1 THROUGH 13 INCLUSIVE.

B. AFTER PURGING A NEW SERVICE AND BEFORE INSTALLING ANY METER, THE LOCKWING METER VALVE (ITEM NO. 3) SHALL BE LOCNG WITH A GAS SNAP LOCK (ITEM ID 136506). SHOULD ONE OF THE METERS REQUIRE SERVICE BEFORE THE OTHERS, THE LOCKWING METER VALVES (ITEM NO. 21) TO THE METERS NOT YET READY FOR SERVICE SHALL BE LOCNG WITH THE TYPE OF LOCKING DEVICES. REFER TO CUST-5250

C. ALL PIPE AND FITTINGS SHALL BE GALVANIZED.

D. RISER PIPE AND METER SET SHALL BE LOCATED TO PREVENT PHYSICAL DAMAGE TO THE INSTALLATION BY VEHICLES OR OTHER MECHANICAL DEVICES. REFER TO CUST–5040

E. MAINTAIN ½" MINIMUM CLEARANCE BETWEEN REGULATOR AND METER CASE OR ANY OTHER FOREIGN STRUCTURE. SWING REGULATOR IF NESSARY TO OBTAIN CLEARANCE.

F. **CUSTOMER TO INSTALL BRASS OR ALUMINUM PERMANENT ID TAG ON EACH METER OUTLET PIPING (ITEM NO. 23 OR 24) STAMPED OR ENGRAVED WITH STORE # / APARTMENT # / UNIT OR ADDRESS**

G. PROPER LENGTH OF NIPPLE (ITEM NO. 8 OR 14) ABOVE UNION (ITEM NO. 9) SHALL BE SELECTED SO THAT THE TOP OF THE METER SHALL NOT EXCEED 6 FEET ABOVE GROUND LEVEL. BOTTOM OF THE METER SHALL NEVER BE LESS THAN 4 INCHES ABOVE GROUND LEVEL.

H. VENT PIPING SIZE, LENGTH AND NUMBER OF ELBOWS SHALL MEET THE REQUIREMENTS OF GENG-2010.

I. FOR MORE THAN 3 METERS AND HIGHER LOADS, USE 1 ¼" DIAMETER MANIFOLDS. REFER TO MTRS-6215

J. THE GAS SERVICE LOCATION TAG SHALL BE INSTALLED PER CUST- 5230

K. FOR NEW CONSTRUCTION OR ALTERATIONS SEE SERV-6225 VENT PIPING LOCATION. IN GENERAL REGULATOR VENT PIPING SHALL BE A MINIMUM OF 18 INCHES ABOVE GRADE. IN AREAS OF KNOWN FLOODING THE VENT PIPING SHOULD BE A MINIMUM OF 18 INCHES ABOVE THE EXPECTED HEIGHT OF THE FLOODWATERS. A MINIMUM OF 18 INCHES MUST BE MAINTAINED FROM ANY OPENING WHERE GAS MAY ENTER THE PREMISE.

* * SUPPLIED AND INSTALLED BY THE CUSTOMER
X X TO BE SUPPLIED BY FIELD OPERATIONS
\+ AS REQUIRED

24	CUSTOMER HOUSE LINE	+	* *	+	* *	+	* *	+	* *
23	NIPPLE – 1" X AS REQUIRED	2	* *	3	* *	2	* *	3	* *
22	ELBOW - 1" 90 DEGREE	6	* *	9	* *	6	* *	9	* *
21	METERCOCK – LOCKWING – 1"	2	* *	3	* *	2	* *	3	* *
20	NIPPLE – 1" X 3"	4	* *	6	* *	4	* *	6	* *
19	ELBOW – 1 ¼" X 1" – 90 DGREE - REDUCING	1	* *	1	* *	1	* *	1	* *
18	TEE – 1 ¼" X 1 ¼"X 1" - REDUCING	1	* *	2	* *	1	* *	2	* *
17	ROD OR PIPE – ½" OR GAL. PIPE STRAPS	+	* *	+	* *	+	* *	+	* *
16	NIPPLE – 1 ¼" X LENGTH AS REQUIRED	1	* *	1	* *	1	* *	1	* *
15	ELBOW – 1 ¼" – 90 DGREE – GALV .	2	* *	2	* *	2	* *	2	* *
14	NIPPLE – 1 ¼" X 12"	2	* *	3	* *	2	* *	3	* *
13	GAS METER – TEMP . COMPENSATED GAS – 175 OR 250 CLASS	2	X X	3	X X	2	X X	3	X X
12	METER NUT GASKET – 20 LIGHT	4	366039	6	366039	4	366039	6	366039
11	METER NUT – 20 LIGHT	4	345003	6	345003	4	343003	6	343003
10	METER SWIVEL – 1" X 20 LIGHT	4	366008	6	366008	4	366008	6	366008
9	INSULATED UNION – 1 ¼" – GALV. – THREADED END	1	380105	1	380105	1	380105	1	380105
8	NIPPLE – 1 ¼" X 3" – GALV. – THREADED END	1	* *	1	* *	-	-	-	-
7	REGULATOR – 1 ¼" –15# MAX INLET – ¼" ORIFICE REGULATOR – 1 ¼" –60# MAX INLET – 3/16" ORIFICE REGULATOR – 1 ¼" –124# MAX INLET – 1/8" ORIFICE	1	357007 357519 357046	1	357007 357519 357046	-	-	-	-
6	NIPPLE – 1 ¼" X 4" – GALV. – THREADED END	2	343155	2	343155	1	* *	1	* *
5	GAS SERVICE LOCATION TAG	1	301728	1	301728	1	301728	1	301728
4	GAS SNAP LOCK	1	136506	1	136506	1	136506	1	136505
3	LOCKWING METERCOCK – 1 ¼" – THREADED END	1	315013	1	315013	1	315013	1	315013
2	RISER – 1 ¼" C.T.S. PLASTIC X 1 ¼" I.P.S. STEEL - PREBENT	-	-	1	-	1	350188	1	350188
1	RISER – 1" C.T.S. PLASTIC X 1 ¼" I.P.S. STEEL - PREBENT	1	350013	1	350013	1	-	-	-
		2 METER	3 METER			2 METER		3 METER	
		HIGH PRESSURE (60 PSIG)				LOW PRESSURE (6" W.C.)			
No.	**ITEM**							**NATIONAL GRID CODE No.**	

BILL OF MATERIAL

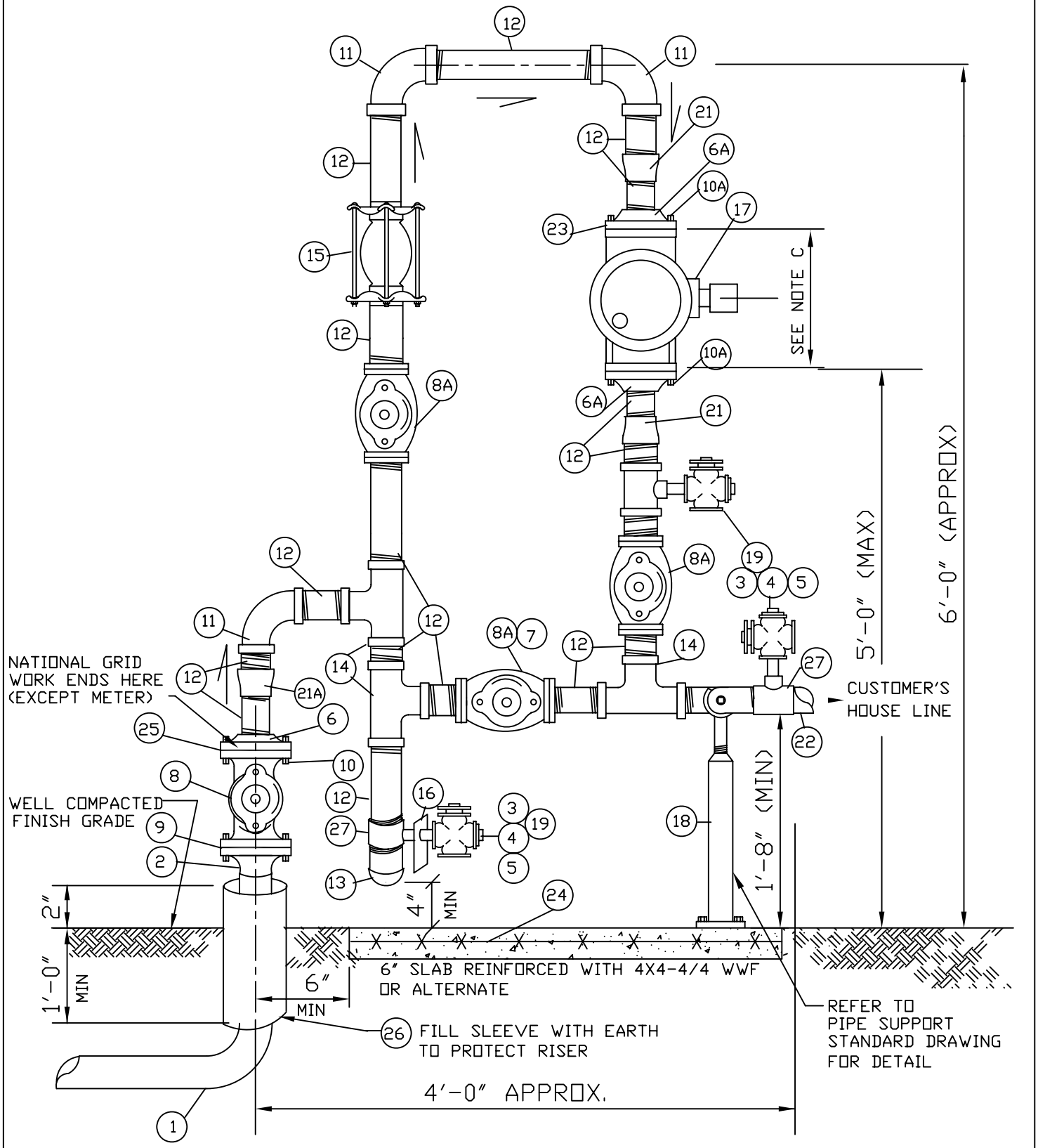

nationalgrid

LONG ISLAND

LP MAIN / LP METERING FOR 3M125 OR 7M125 VERTICAL - ROTARY GAS METER

REVISIONS: REDRAWN AND REPLACES 14911
ADDED PURGE AFTER METER

DATE: 7/1/2003	EFFECTIVE DATE: 9/17/2004
DESIGN: JAL	STD. DWG.
DRAWN: MLoP	NO. **MTRS-6135**

NOTES

A. RISER AND VALVE SHALL BE OF THE SAME SIZE AS THE SERVICE SIZE I.E. FOR A 4” SERVICE USE A 4” RISER AND A 4” VALVE WITH THE APPROPRIATE ITEM SIZES REQUIRED.

	DESCRIPTION 3 M	ITEM ID	QUANTITY NAT. GRID	QUANTITY BY CUSTOMER
27	TEE – 3” X 3” X 3 /4”- THREADED	X X		3
26	PIPE SLEEVE – 4” – PLASTIC OR EQUIVALENT	NGG	1	
25	GASKET RING – 2”	X X		1
24	SLAB REINF. – 4X4 – 4/4 WIRE WELDED FABRIC	X X		1
23	GASKET RING - METER	317027	2	
22	PIPE – HOUSE LINE	X X		1
21,21A	REDUCER – 3” X 2” - THREADED	X X		3
20	NOT USED			
19	GAS SNAP LOCK	136506	3	
18	SUPPORT – 2 1/ 2” PIPE – ADJUSTABLE – TOP SECTION SEE MTRS 6475 BASE 20” - 25” HEIGHT OR BASE 26” - 31” HEIGHT OR BASE 32” – 41” HEIGHT	308049 308041 308052 308051		1
17	METER – LINE MOUNTED ROTARY – 3M125	X X	1	
16	TAG – SERVICE LOCATION	301728	1	
15	COUPLING – 3” – COMPANION – DRESSER STYLE 38	XX		1
14	TEE – 3” - THREADED	X X		3
13	CAP – 3” - THREADED	X X		1
12	PIPE – 3” X LENGTH AS REQUIRED - THREADED	X X		=
11	ELBOW – 3” - THREADED	X X		3
10A	BOLT – 5 / 8” X 2” ASTM A307 GR. B (CAP SCREWS)	362027	8	
10	BOLT – 5 /8” X 2 3/ 4” A 307 - MACHINE	309303	8	
9	KIT – 2” – FLANGED - INSULATED	333017	1	
8A	VALVE – 3” - THREADED	X X		3
8	VALVE – 2” – FLANGED – SEE NOTE A BELOW	382214	1	
7	LOCKING DEVICE	NGG	1	
6,6A	FLANGE – 2” FF. – COMPANION – ANSI CLASS 125	X X		3
5	PLUG – 3 /4” - THREADED	X X		3
4	GAS LOCK COCK – 3 /4”	X X		3
3	NIPPLE – 3 /4”” X 3” - THREADED	X X		3
2	FLANGE – 2” – WELD NECK	322156	1	
1	RISER – 2” – PIPE- -SEE NOTE A ABOVE	* 350+/-		
No.	**ITEM**		**NATIONAL GRID CODE No.**	

BILL OF MATERIAL FOR 3M METER

NOTES

	ITEM	ITEM ID	QTY	QTY
28	PIPE – STANCHION – SADDLE - ADJUSTABLE		BY NAT. GRID	BY CUSTOMER
27	TEE – 4” X 4” X 3/4” - THREADED	X X		3
26	SLEEVE – 6” – PIPE – PLASTIC OR EQUIVALENT	NGG	1	
25	GASKET RING – 4”	X X		1
24	SLAB REINF. – 4 X 4 – 4/4 WIRE WELDED FABRIC	X X		1
23	GASKET RING - METER	317028	2	
22	PIPE – HOUSE LINE	X X		1
21A	NOT TO BE USED			
21	REDUCER 4” X 3”	X X		2
20	NOT USED			
19	GAS SNAP LOCK	136506	3	
18	SUPPORT – 2 1/ 2” PIPE – ADJUSTABLE – TOP SECTION SEE MTRS 6475 BASE 20” - 25” HEIGHT OR BASE 26” - 31” HEIGHT OR BASE 32” – 41” HEIGHT	308049 308041 308052 308051		1
17	METER – LINE MOUNTED ROTARY – 7M125	X X	1	
16	TAG – SERVICE LOCATION	301728	1	
15	COUPLING – 4” – COMPANION – DRESSER STYLE 38	X X		1
14	TEE – 4” - THREADED	X X		3
13	CAP – 4” - THREADED	X X		1
12	PIPE – 4” X LENGTH AS REQUIRED – THREADED ENDS	X X		+
11	ELBOW – 4” - THREADED	X X		3
10A	BOLT – 5/8” X 2” ASTM A307 GR B (CAP SCREWS)	362027	8	
10	BOLT – 5/8” X 2 3/4” A 307 - MACHINE	309303	16	
9	KIT – 4” – FLANGED - INSULATED	333023	1	
8A	VALVE - 4” - THREADED	X X		3
8	VALVE – 4” - FLANGED	382307	1	
7	LOCKING DEVICE	NGG	1	
6A	FLANGE – 3” FF – COMPANION – ANSI CLASS 125	X X		2
6	FLANGE – 4” FF – COMPANION – ANSI CLASS 125	X X		1
5	PLUG – 3 /4” - THREADED	X X		3
4	GAS LOCK COCK – 3 /4”	X X		3
3	NIPPLE – 3 /4” X 3” - THREADED	X X		3
2	FLANGE – 4” – WELD NECK	322242	1	
1	RISER – 4” - PIPE	*350-	+	
No.	**ITEM**		**NATIONAL GRID CODE No.**	

BILL OF MATERIAL FOR 7M METER

NOTES

A. FOR GENERAL NOTES SEE MTRS-6545.

B. THIS CONSTRUCTION STANDARD SHALL BE USED WHEN AN OUTDOORS 3M OR 7M LOW PRESSURE MAIN & LOW PRESSURE METER SET IS SPECIFIED ON A WORK ORDER. IT SHOULD BE DESIGNED IN ACCORDANCE WITH THE CUSTOMERS TOTAL SERVICE LENGTH AND SIZE AS OUTLINED IN THE DESIGN SECTION.

C. DISTANCE BETWEEN METER CONNECTION IS 6-3/4" (3M) & 9-1/ 2" (7M).

D. CENTERLINE OF PIPING SHALL BE APPOX. 1'-8" FROM WALL.

E. CINCH ANCHORS OR EQUIVALENT TO BE INSTALLED IN FLOOR FLANGES (ITEMS 29) BY CUSTOMER.

F. NATIONAL GRID WILL SUPPLY AND INSTALL ALL ITEMS AS LISTED IN M&S CODE COLUMN OF BILL OF MATERIAL.

* MISSING DIGIT DETERMINED BY TYPE SIZE OR LENGTH OF ITEM
+ AS REQUIRED
X X TO BE SUPPLIED BY F.O.

* * SUPPLIED AND INSTALLED BY CUSTOMER
SEE GENERAL NOTE Z OF MTRS 6545

No.	**ITEM**	**NATIONAL GRID CODE No.**

BILL OF MATERIAL

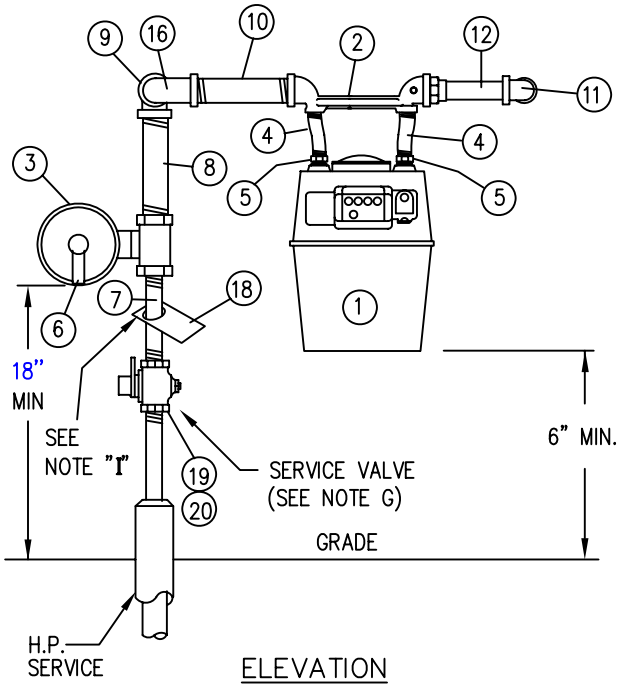

ELEVATION

250 CFH TYPE

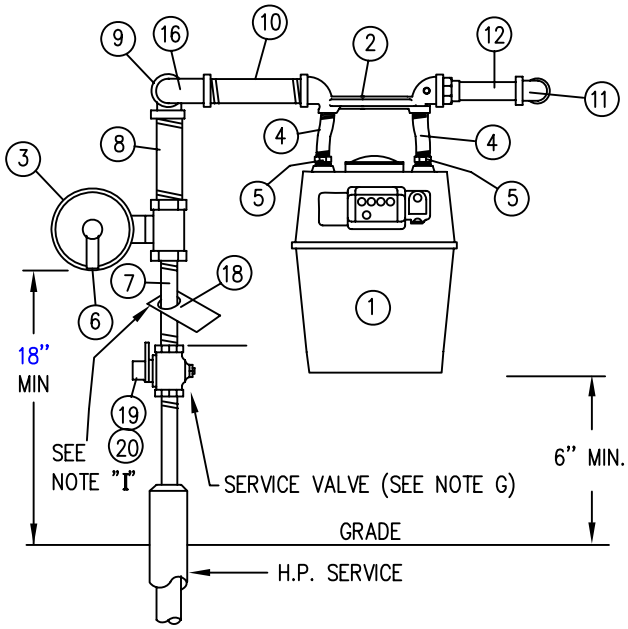

ELEVATION

425 CFH AND 630 TYPE

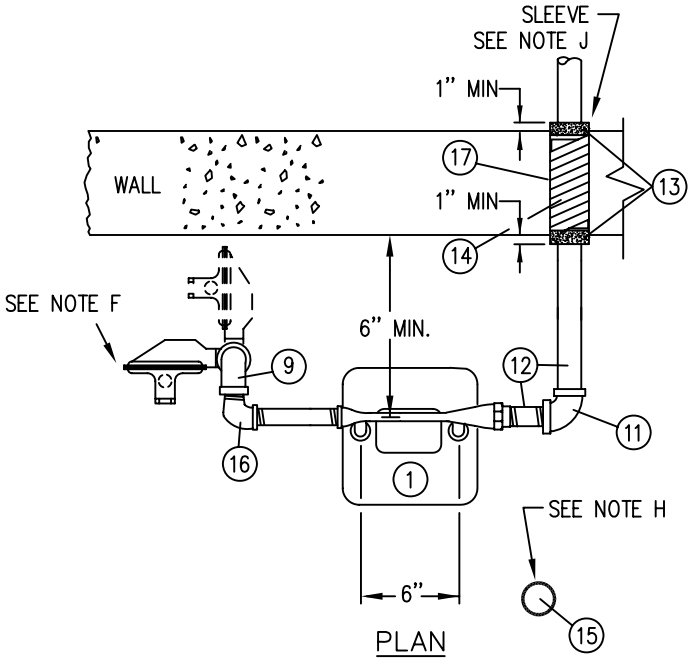

PLAN

250 CFH TYPE

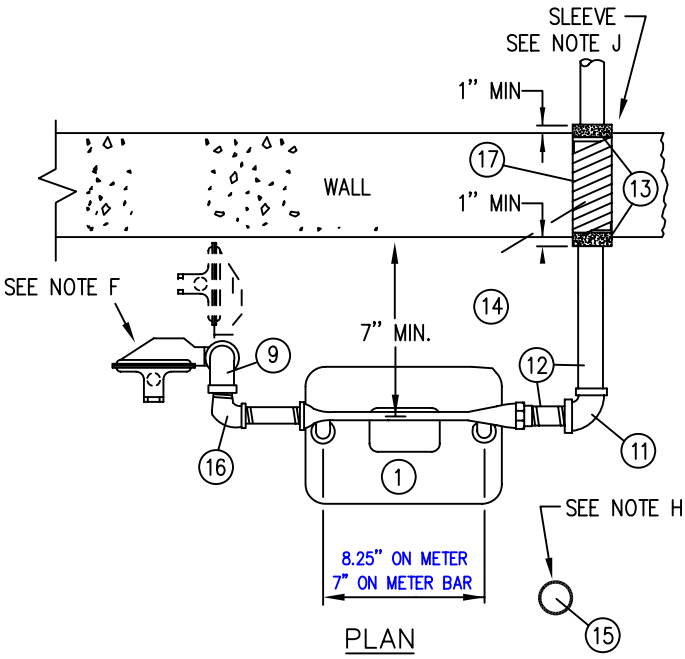

PLAN

425 CFH AND 630 TYPE

nationalgrid

LI–NYC

SINGLE METER AND REGULATOR INSTALLATION
OUTSIDE SET, 1/2" AND 3/4" DIAMETER
SERVICES OPERATING AT 15 – 124 PSIG
250 CFH, 425 CFH AND 630 CFH RANGE

REVISIONS: ADDED CLASS 630 METER

DATE:	07/01/2003	EFFECTIVE DATE:	12/01/2006
DESIGN:	MJM	STD. DWG. NO.	MTRS–6140
DRAWN:	P. Gugliotta		

NOTES

A. NATIONAL GRID REQUIREMENTS FOR THE CONSTRUCTION OF METER HEADERS AND INSTALLATIONS ARE CONTAINED IN NATIONAL GRID'S SPECIFICATIONS CUST-5235 AND THE NATIONAL GRID BLUE BOOK
B. ADDITIONAL FITTINGS MAY BE REQUIRED TO MAKE THE METER AND REGULATOR INSTALLATION.
C. NATIONAL GRID SHALL NOT BE RESPONSIBLE FOR FITTING DIMENSIONS OR FOR SCALED DIMENSIONS.
D. FOR FLOW RATES GREATER THAN 630 CFH SEE MTRS-6185-LI OR MTRS-6120-NYC & MTRS-6121-NYC FOR DUAL REGULATOR CONFIGURATIONS
E. FOR FLOW RATES GREATER THAN 1000 CFH (60 PSIG SYSTEM) OR 960 CFH (15 PSIG SYSTEM), CONTACT GAS ENGINEERING FOR SPECIAL ENGINEERING METER AND REGULATOR LAYOUT.
F. REGULATOR VENT MUST FACE DOWN AND BE EQUIPPED WITH A RAIN AND INSECT RESISTANT SCREEN. FOR NEW CONSTRUCTION OR ALTERATIONS SEE SERV-6225 VENT PIPING LOCATION. IN GENERAL REGULATOR VENT PIPING SHALL BE A MINIMUM OF 18 INCHES ABOVE GRADE. IN AREAS OF KNOWN FLOODING THE VENT PIPING SHOULD BE A MINIMUM OF 18 INCHES ABOVE THE EXPECTED HEIGHT OF THE FLOODWATERS. A MINIMUM OF 18 INCHES MUST BE MAINTAINED FROM ANY OPENING WHERE GAS MAY ENTER THE PREMISE.
G. SERVICE VALVE MUST BE PAINTED RED (IN NEW YORK CITY ONLY).
H. WHERE VEHICULAR TRAFFIC IS A CONCERN, INSTALL PROTECTION POST. SEE STANDARD DRAWING MTRS-6060 FOR INSTALLATION REQUIREMENTS.
I. CPR TAGS ARE REQUIRED IN LONG ISLAND INSTALLATIONS ONLY
J. WALL SLEEVES ARE ONLY REQUIRED WHEN SERVICE PENETRATES CONCRETE OR MASONRY WALL. WALL SLEEVES ARE RECOMMENDED, BUT NOT REQUIRED THROUGH STUCCO OR FRAME CONSTRUCTION.
K. THE CLASS 400 METERS HAVE 30 LIGHT CONNECTIONS IN NEW YORK CITY AND 45 LIGHT CONNECTIONS IN LONG ISLAND. THE CLASS 630 METERS WILL HAVE 45 LIGHT CONNECTIONS IN NYC AND LI.
L. THE PIPE AND FITTING LISTED BELOW ARE GALVANIZED. BLACK PIPE AND FITTINGS THAT ARE PRIMED AND PAINTED ARE ALSO ACCEPTABLE. **NOTE FOOTNOTES ON METER & SWIVELS B = BLACK, G = GALVANIZED**

METER CAPACITIES	0-250 CFH RANGE	0-425 CFH RANGE	0-630 CFH RANGE
AMERICAN	250	425	630
EQUIMETER/SENSUS	275	415	
SPRAGUE/SCHLUMBERGER/ ACTARIS	250	400	

No.	ITEM		250 METER SET		400 & 630 METER SET		NAT. GRID CODE No.
19	METER VALVE, LOCK WING GALVANIZED		315006		315013		NAT. GRID
18	CPR TAG (LONG ISLAND ONLY)		301728		301728		NAT. GRID
17	WALL SLEEVE – PVC PLASTIC PIPE OR STD. WT STEEL PIPE (2" LONGER THAN WALL THICKNESS)		---		---		CUSTOMER
16	STREET ELBOW 90 DEGREE GALVANIZED		320058		320059		CUSTOMER
15	PROTECTION POST (SEE NOTE H)		---		---		CUSTOMER
14	YARN, PACKING		---		---		CUSTOMER
13	FLEXIBLE SEALING COUMPOUND (DUXSEAL)		---		---		CUSTOMER
12	HOUSE PIPING TO LOAD		---		---		CUSTOMER
11	ELBOW 90 DEGREES M.I., SIZE OF HOUSE PIPE (GALV.)		1"		1-1/4"		CUSTOMER
10	NIPPLE, 3" MINIMUM GALVANIZED (LENGTH AS REQUIRED)		1"	343144	1-1/4"	343155	CUSTOMER
9	ELBOW/REDUCING ELBOW 90 DEG M.I. GALVANIZED		1"	320008	1"X1-1/4"	320024	CUSTOMER
8	NIPPLE 1" X 3" MINIMUM (LENGTH AS REQUIRED)		1"	343144	1"	343144	CUSTOMER
7	NIPPLE ¾" X 4" MINIMUM (LENGTH AS REQUIRED)		¾"	343136	¾"	343136	CUSTOMER
6	VENT ASSEMBLY WITH INSECT RESISTANT SCREEN IF REQ'D, 1"		786214		786214		NAT. GRID
5	METER CAP/NUT CONNECTION SEE NOTE K	NEW YORK CITY 250 & 400	345003 G 311040 B		1-1/4" 30 LT	311045 G 311163 B	NAT. GRID
		NEW YORK CITY 630 CLASS	---		1-1/4" 45 LT	311164	NAT. GRID
		LONG ISLAND 250/400/630	345003		1-1/4" 45 LT	345011	NAT. GRID
4	METER SWIVEL OFFSET GALV. SEE NOTE K	NEW YORK CITY 250 & 400	1"	366008 G 366025 B	1-1/4" 30 LT	366009 G 366029 B	NAT. GRID
		NEW YORK CITY 630 CLASS	-	-	1-1/4" 45 LT	366006	
		LONG ISLAND 250/400/630	1"	366008	1-1/4" 45 LT	366007	
3	REGULATOR, ¾" X 1" WITH 1/8" ORIFICE: FISHER HSR OR S-102K, ACTARIS B-42R OR B-31R, INVENSYS 143-80-2, AMERICAN 1813B2		357045		357045		NAT. GRID
2	METER BAR, W/INSUL. OUTLET, GALV. AY MCD#6610-GCCD OR EQ		1" X 1" X 1" 305006		---		NAT. GRID
	METER BAR, W/INSUL. OUTLET, GALV. AY MCD#6640-GCCD OR EQ METER BAR, W/INSUL. OUTLET, BLACK WITH TOP OUTLET		----		1-1/4" X 1-1/4" 305007 1-1/4" X 1-1/4" 305004		
1	METER (TEMPERATURE COMPENSATED)		250 CLASS		400 & 630 CLASS		

BILL OF MATERIAL

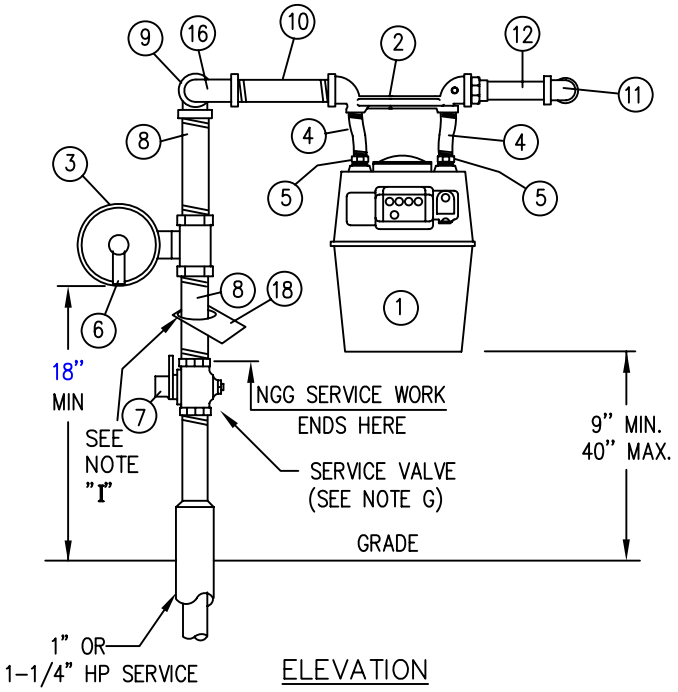

ELEVATION
250 CFH TYPE

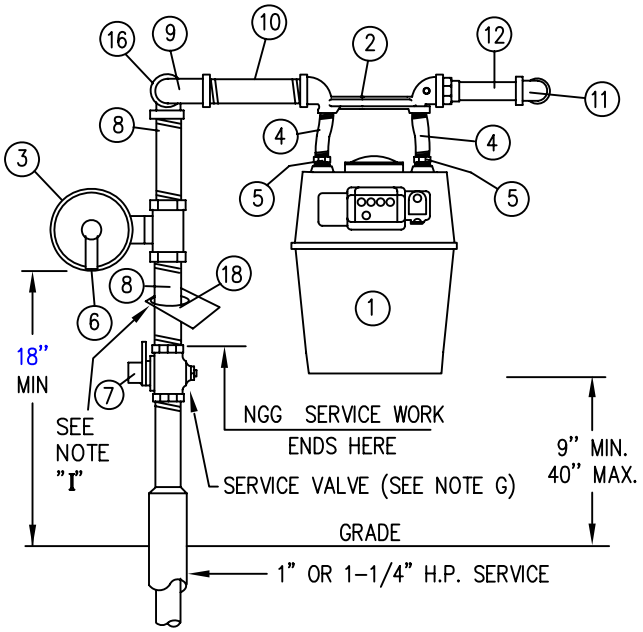

ELEVATION
425 CFH AND 630 TYPE

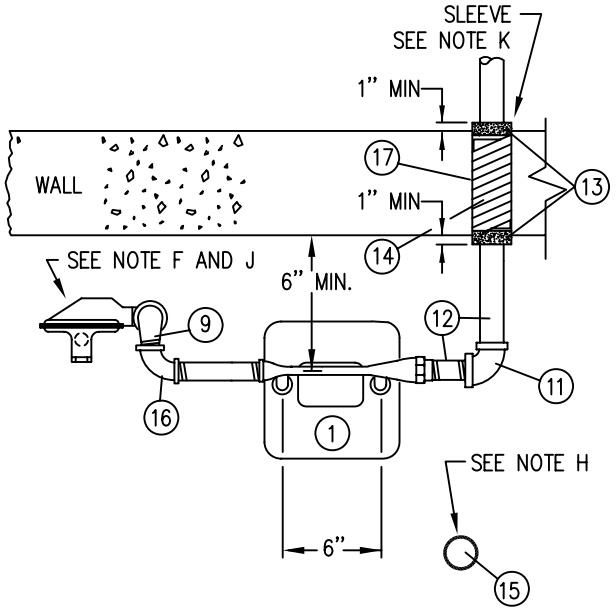

PLAN
250 CFH TYPE

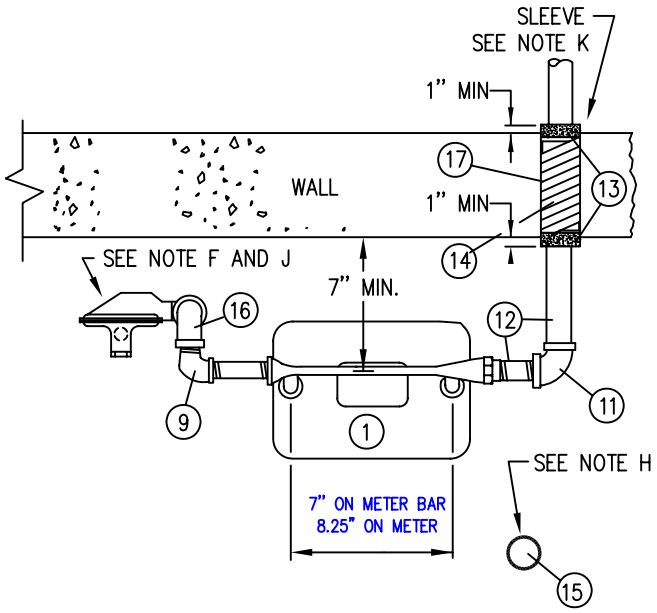

PLAN
425 CFH AND 630 TYPE

nationalgrid

LI–NYC

SINGLE METER AND REGULATOR INSTALLATION
OUTSIDE SET, 1" AND 1-1/4" DIAMETER SERVICES
OPERATING AT 15 - 124 PSIG
0 - 250 CFH, 0 - 425 CFH AND 0 - 630 CFH RANGE

REVISIONS: ADDED CLASS 630 METER

DATE:	07/01/2003	EFFECTIVE DATE:	12/01/2006
DESIGN:	MJM	STD. DWG. NO.	**MTRS-6142**
DRAWN:	DiMaio		

NOTES:

A. NATINAL GRIS'D REQUIREMENTS FOR THE CONSTRUCTION OF METER HEADERS AND INSTALLATIONS ARE CONTAINED IN NATIONAL GRID'S SPECIFICATIONS CUST-5235.
B. ADDITIONAL FITTINGS MAY BE REQUIRED TO MAKE THE METER AND REGULATOR INSTALLATION.
C. NATIONAL GRID SHALL NOT BE RESPONSIBLE FOR FITTING DIMENSIONS OR FOR SCALED DIMENSIONS.
D. IN NYC, FOR FLOW RATES BETWEEN 630 CFH AND 820 CFH (60# SYSTEM) AND 630 CFH AND 960 CFH (15# SYSTEM) SEE STANDARD DRAWING MTRS-6120 & MTRS-6121.
E. IN NYC, FOR FLOW RATES GREATER THAN 820 CFH (60 PSIG SYSTEM) OR 960 CFH (15 PSIG SYSTEM) SEE SPECIAL ENGINEERING METER AND REGULATOR LAYOUT.
F. REGULATOR VENT MUST FACE DOWN AND BE EQUIPPED WITH A RAIN AND INSECT RESISTANT SCREEN. FOR NEW CONSTRUCTION OR ALTERATIONS SEE SERV-6225 VENT PIPING LOCATION. IN GENERAL REGULATOR VENT PIPING SHALL BE A MINIMUM OF 18 INCHES ABOVE GRADE. IN AREAS OF KNOWN FLOODING THE VENT PIPING SHOULD BE A MINIMUM OF 18 INCHES ABOVE THE EXPECTED HEIGHT OF THE FLOODWATERS. A MINIMUM OF 18 INCHES MUST BE MAINTAINED FROM ANY OPENING WHERE GAS MAY ENTER THE PREMISE.
G. SERVICE VALVE MUST BE PAINTED RED (IN NEW YORK CITY ONLY).
H. WHERE VEHICULAR TRAFFIC IS A CONCERN, INSTALL PROTECTION POST. SEE STANDARD DRAWING MTRS-6060 FOR INSTALLATION REQUIREMENTS.
I. CPR TAGS ARE REQUIRED IN LONG ISLAND INSTALLATIONS ONLY.
J. WARNING ON 99 PSIG AND 124 PSIG SERVICES, THE ORIFICE MUST 1/8".
K. WALL SLEEVES ARE ONLY REQUIRED WHEN SERVICE PENETRATES CONCRETE OR MASONRY WALL. WALL SLEEVES ARE RECOMMENDED. BUT NOT REQUIRED THROUGH STUCCO OR FRAME CONSTRUCTION.
L. THE CLASS 400 METERS HAVE 30 LIGHT CONNECTIONS IN NEW YORK CITY AND 45 LIGHT CONNECTIONS IN LONG ISLAND. THE CLASS 630 METER WILL HAVE 45 LIGHT CONNECTIONS IN LI AND NYC. **FOOTNOTE B = BLACK AND G = GALVANIZED**

METER CAPACITIES	0 - 250 CFH RANGE	0 - 425 CFH RANGE	0 - 630 CFH RANGE
AMERICAN	AL -250	AL-425	AC-630
ROCKWELL / EQUIMETER	275	415	
SPRAGUE / SCHLUMBERGER	250	400	

No.	ITEM		250 METER METER SET		400 & 630 METER SET		NAT. GRID CODE No.
18	CPR TAG (LONG ISLAND ONLY)		301728		301728		NAT. GRID
17	WALL SLEEVE – PVC PLASTIC PIPE OR STD. WT STEEL PIPE (2" LONGER THAN WALL THICKNESS)		------		------		CONTRACTOR
16	ELBOW 90 DEGREE GALVANIZED		1"	320008	1-1/4"	320009	CONTRACTOR
15	PROTECTION POST (SEE NOTE H)		------		------		CONTRACTOR
14	YARN, PACKING		------		------		CONTRACTOR
13	FLEXIBLE SEALING COMPOUND (DUXSEAL)		------		------		CONTRACTOR
12	HOUSE PIPING TO LOAD		------		------		CONTRACTOR
11	ELBOW ,90 M.I. SIZE OF HOUSE PIPE (GALV.)		1"		1 - 1/4"		CONTRACTOR
10	NIPPLE 3" MINIMUM GALVANIZED (LENGTH AS REQUIRED)		1"	343144	1 - 1/4"	343155	CONTRACTOR
9	STREET ELBOW, / REDUCING STREET ELBOW 90 M.I. GALVANIZED		1" X 1 - 1/4"	320094	1 - 1/4"	320059	CONTRACTOR
8	NIPPLE 4" MINIMUM GALVANIZED (LENGTH AS REQUIRED)		1 - 1/4"	343155	1 -1/4"	343155	CONTRACTOR
7	METER VALVE, LOCK WING GALVANIZED		1 - 1/4"	315013	1 -1/4"	315013	CONTRACTOR
6	VENT ASSEMBLY WITH INSECT RESISTANT SCREEN, IF REQUIRED, 1"		786214		786214		NAT. GRID
5	METER CAP / NUT CONNECTION SEE NOTE L	NEW YORK CITY 250 & 400	345003 G 311040 B	1 – 1 / 4" 20LT	311045 G 1-1/4" 30 LT 311163 B 1-1/4" 30 LT		NAT. GRID
		NEW YORK CITY 630 CLASS	-	-	311164 1-1/4" 45 LT B 345011 1-1/4" 45 LT G		
		LONG ISLAND (GALV.)	345003		1 – 1 / 4" 45 LT	345011	
4	METER , OFFSET SWIVEL SEE NOTE L	NEW YORK CITY 250 & 400	1" 20 LT	366008 B 366025 G	1-1/4" 30 LT.	366029 B 366009 G	NAT. GRID
		NEW YORK 630 CLASS	-	-	1-1/4" 45 LT.	366006 B 366007 G	
		LONG ISLAND (GALV.)	1" 20 LT.	366008	1-1/4" 45 LT.	366007	
3	REGULATOR, 1 –1/4" FISHER S – 102K, SCHLUM. B – 42R / B 31 R, INVENSYS 143 – 80 –2 FOR 15 PSIG SERVICE – REGULATOR, 1 – 1/4" WITH 1/4" ORIFICE FOR 60 PSIG SERVICE- REGULATOR, 1 – 1/4" WITH 3 /16" ORIFICE FOR 99 / 124 PSIG SERVICE – REGULATOR, 1 – 1/4" WITH 1/8" ORIFICE		357007 357519 357046		357007 357519 357046		NAT. GRID NAT. GRID NAT. GRID
2	METER BAR, W / INSUL. OUTLET, GALV. AY MCD#6610-GCCD OR EQ. METER BAR, W / INSUL. OUTLET, GALV. AY MCD#6640-GCCD OR EQ. METER BAR, W/INSULATED OUTLET, BLACK WITH TOP OUTLET		1" X 1" X1" 305006 ------- -------		- - - - - 1-1/4" X 1-1/4" 305007 1-1/4" X 1-1/4" 305004		NAT. GRID
1	METER (TEMPERATURE COMPENSATED		0-250		0-425 & 0-630		NAT. GRID

BILL OF MATERIAL

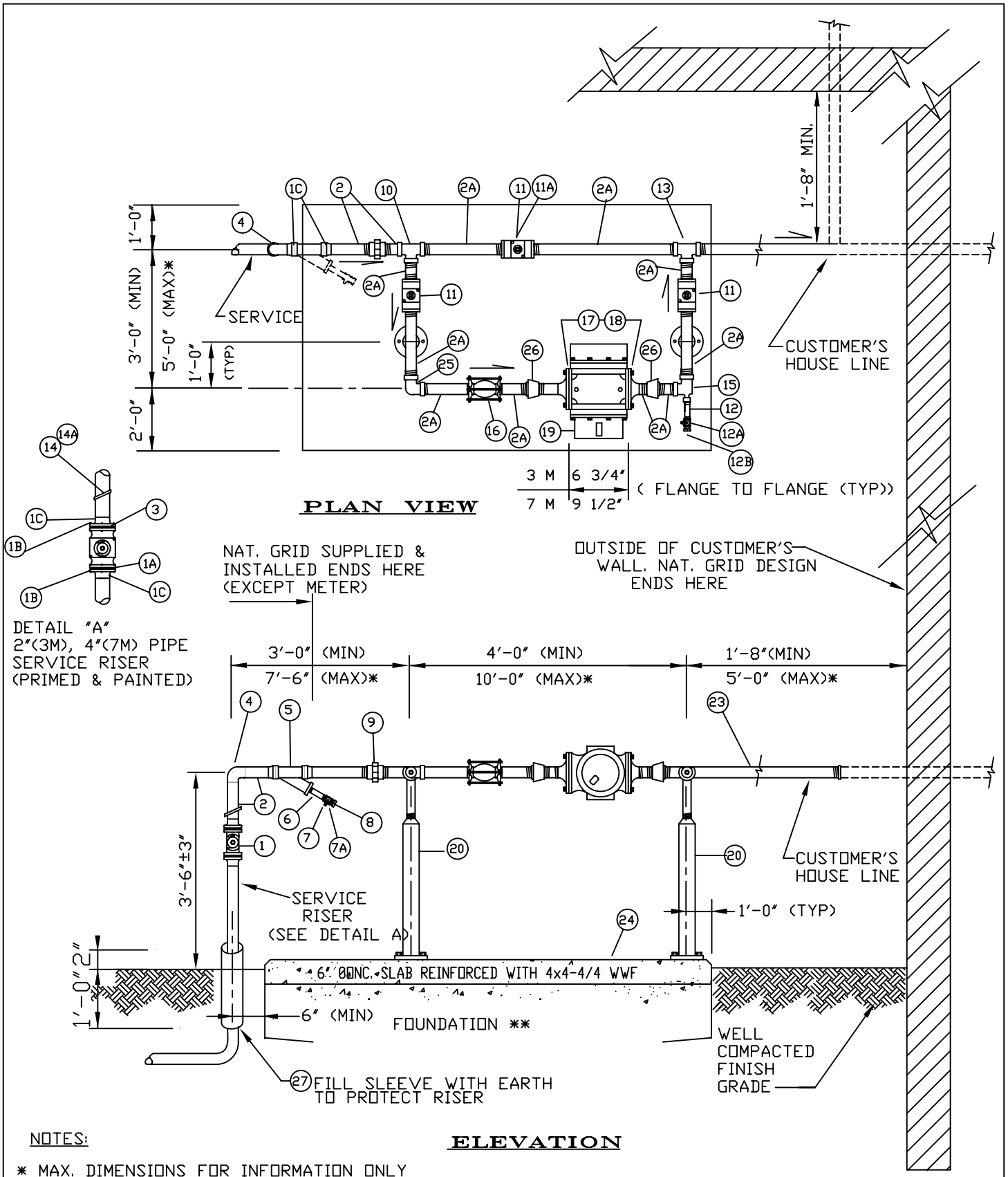

NOTES:

* MAX. DIMENSIONS FOR INFORMATION ONLY
** SEE GENERAL NOTES

nationalgrid
LONG ISLAND

LP MAIN / LP METERING FOR 3M125, OR 7M125 HORIZONTAL - ROTARY GAS METER OUTSIDE LOCATIONS

REVISIONS: REDRAWN AND REPLACES 14912	DATE: 7/1/2003	EFFECTIVE DATE: 7/1/2003
	DESIGN: GJK	STD. DWG.
	DRAWN: HF	NO. MTRS-6145

NOTES

A. SEE GENERAL NOTES MTRS- 6545
B. ALL SCREW TYPE PIPE FITTINGS TO BE HOT DIPPED GALVANIZED
C. ALL FITTINGS SHALL BE MALLEABLE IRON CLASS 150, ANSI B 16.3
D. CINCH ANCHORS TO BE INSTALLED IN FLOOR FLANGES (ITEM 20) BY CUSTOMER
E. FOR UNDERGROUND CUSTOMER'S HOUSE PIPING REFER TO DESIGN SECTION
F. FOR VEHICULAR DAMAGE PROTECTION SEE MTRS – 6060
G. A METER SHALL NEVER BE INSTALLED LOWER THAN EITHER SIDE OF PIPE RUNS
H. NAT. GRID WILL SUPPLY AND INSTALL ITEMS 1 THRU 8 (EXCEPT 2A). 11A,14, 17A THRU 19 AND 27

LEGEND
X X – SUPPLIED BY CUSTOMER
** – TO BE SUPPLIED BY F.O.
+ AS REQUIRED

No.	ITEM		NAT. GRID CODE No.
27	SLEEVE – 4" PIPE (PLASTIC OR EQUIVALENT)	1	NAT. GRID
26	REDUCER 3" X 2"	2	X X
25	ELBOW – 90 3"	1	X X
24	SLAB REINF 4X 4 – 4/4 WWF	1	X X
23	PIPE HOUSE LINE	+	X X
22	NOT USED		
21	NOT USED		
20	SADDLE – PIPE STANCHION - ADJUSTABLE	2	NAT. GRID
19	METER LINE MOUNTED ROTARY 3M 125	1	**
18	GASKET RING- METER	2	317027
17A	BOLT, 5/8 – 11 X 2 ASTM A 307 GR. B	8	362027
17	FLANGE – COMPANION 2"FF, ANSI CLASS 125	2	X X
16	COUPLING – COMPRESSION 3" DRESSER STYLE 38	1	X X
15	TEE 3 X 3 /4 X 3	1	X X
14A	SELF LOCKING NYLON STRAP 14"	1	101003
14	TAG – GAS SERVICE LOCATION	1	301728
13	TEE 3" X 3" X 3"	1	X X
12B	PLUG, SOLID 3 /4" NPT	1	X X
12A	COCK, LOCKWING ¾"	1	X X
12	NIPPLE, 3 /4" X 3" LONG	1	X X
11A	LOCKING DEVICE	1	NAT. GRID
11	VALVE 3"	3	X X
10	TEE 2" X 3" X 3"	1	X X
9	UNION 2"	1	X X
8	PLUG, SOLID 1/2" NPT	1	352060
7A	GAS SNAP LOCK	1	136506
7	COCK, LOCKWING 1/2"	1	NON STOCK
6	NIPPLE, 1/2" X 3" LONG	1	343124
5	STRAINER – CAST IRON, FLANGED END "Y" 100 MESH SCREEN W/BOLTS	1 1	301028 301028
4	ELBOW 2" 90	1	320232
3	GASKET RING 2"	3	317027
2A	PIPE- 3"	+	X X
2	PIPE – 2"	+	350059
1C	FLANGE 2" WELDED NECK	4	322156
1B	BOLTS MACHINE 5/8" X 2 3 /4" A 307	8	309303
1A	GASKET – FLANGED INSULATED INSULATED , 2"	1	333017
1	VALVE – FLANGE 2"	1	382214

BILL OF MATERIAL

NOTES

A. SEE GENERAL NOTES MTRS-6545
B. ALL SCREW TYPE PIPE FITTINGS TO BE HOT DIPPED GALVANIZED
C. ALL FITTINGS SHALL BE MALLEABLE IRON CLASS 150, ANSI B 16.3
D. CINCH ANCHORS TO BE INSTALLED IN FLOOR FLANGES (ITEM 20) BY CUSTOMER
E. FOR UNDERGROUND CUSTOMER'S HOUSE PIPING REFER TO DESIGN SECTION
F. FOR VEHICULAR DAMAGE PROTECTION SEE APPROVED NATIONAL GRID VEHICLE PROTECTOPN POST DRAWING.
G. A METER SHALL NEVER BE INSTALLED LOWER THAN EITHER SIDE OF PIPE RUNS
H. NAT. GRID WILL SUPPLY AND INSTALL ITEMS 1 THRU 8 (EXCEPT 2A). 11A ,14, 14A, 17A THRU 19 AND 27

27	SLEEVE – 6" PIPE (PLASTIC OR EQUIVALENT)	1	NAT. GRID
26	REDUCER 4" X 3"	2	X X
25	ELBOW – 90' 4"	1	X X
24	SLAB REINF 4X4 – 4/4 WWF	1	X X
23	PIPE – HOUSE LINE	+	X X
22	NOT USED		
21	NOT USED		
20	SADDLE – PIPE STANCHION - ADJUSTABLE	2	NAT. GRID
19	METER LINE MOUNTED ROTARY 7M 125	1	**
18	GASKET RING - METER	2	317028
17A	BOLTS, 5 /8 – 11X2 ASTM A 307 GR B	8	362027
17	FLANGE – COMPANION 3"FF. ANSI CLASS 125	2	X X
16	COUPLING- COMPRESSION – 4" DRESSER STYLE 38	1	X X
15	TEE 4" X 3 /4" X 4"	1	X X
14A	SELF LOCKING NYLON STRIP 14"	1	101003
14	TAG – GAS SERVICE LOCATION	1	301728
13	TEE 4"	1	X X
12B	PLUG, SOLID 3/ 4" NPT	1	X X
12A	COCK, LOCKWING 3 /4"	1	X X
12	NIPPLE, 3/ 4" X 3" LONG	1	X X
11A	LOCKING DEVICE	1	NAT. GRID
11	VALVE – 4"	3	X X
10	TEE 4"	1	X X
9	UNION 4"	1	X X
8	PLUG, SOLID 1 1/4" NPT	1	352007
7A	GAS SNAP LOCK	1	136506
7	COCK, LOCKWING 1 1/4"	1	315013
6	NIPPLE, 1 1 /4" X 3" LONG	1	343153
5	STRAINER – CAST IRON, FLANGED END "Y" 100 MESH SCREEN W/BOLTS	1	301027
4	ELBOW – 90 – WELD 4"	1	320215
3	GASKET RING 4"	3	317026
2, 2A	PIPE – 4"	+	350039
1C	FLANGE 4"	4	322242
1B	BOLTS MACHINE 5 /8" X 3" A 307	16	309306
1A	FLANGE – INSULATED 4"	1	333023
1	VALVE – 4"	1	382307
No.	**ITEM**		**NAT. GRID CODE No.**

BILL OF MATERIAL

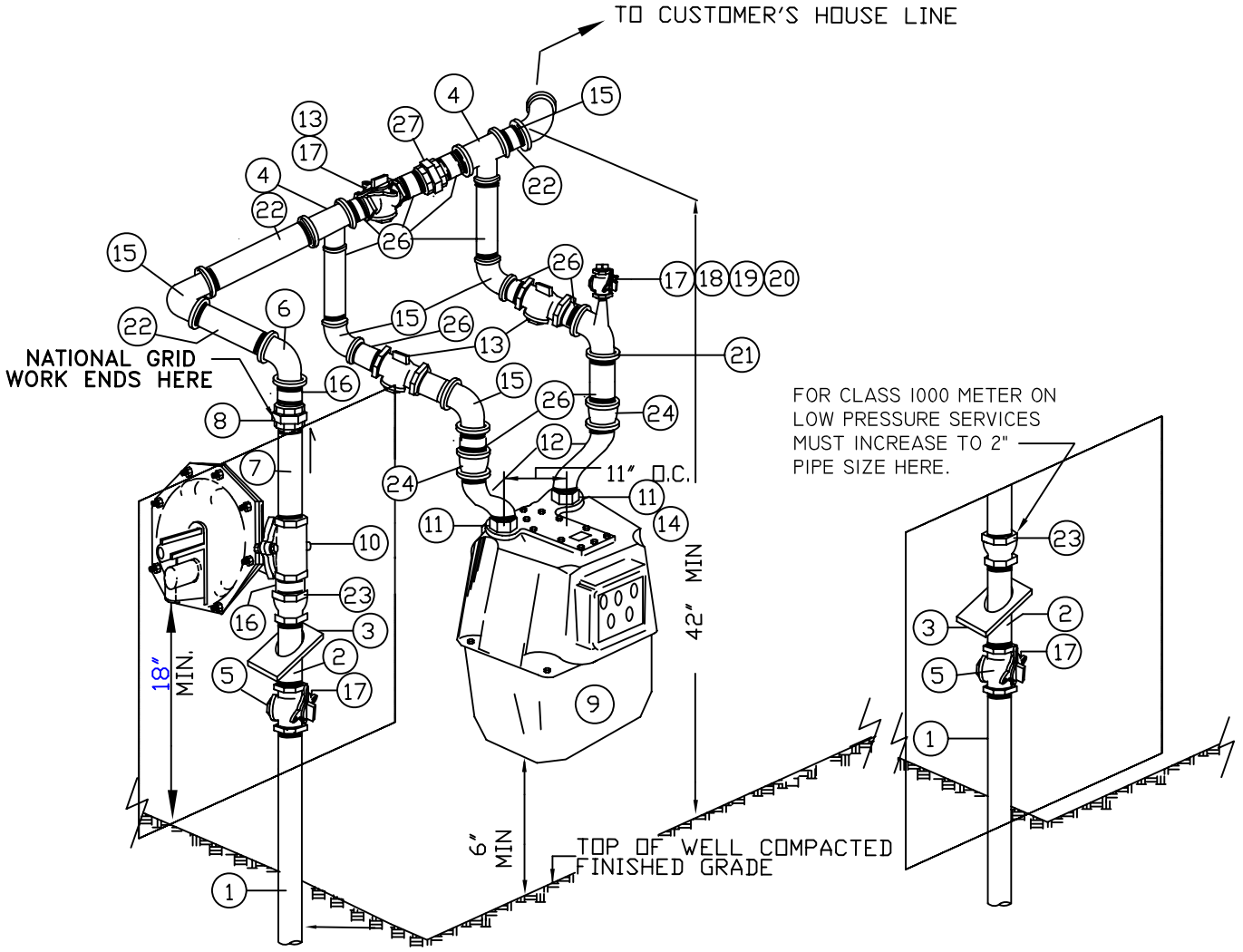

1-1/4", 1-1/2" OR 2" RISERS

HIGH PRESSURE SERVICE
REGULATOR SELECTION – SEE NOTE "K"

LOW PRESSURE SERVICE
SEE NOTE "S"

FIGURE 1 – WITH BYPASS

INLET PRESSURE	REGULATOR	ORIFICE REQUIREMENTS
30/60 PSIG INLET	1-1/4" B-31R ITEM ID 357519 2" S-302/B34SR ITEM ID 357021 OR 2" B34-IMRV ITEM ID 357025 OR 1-1/2" S302/B34SR ITEM ID 357039	3/16" (STANDARD ORIFICE FOR ITEM ID) 7/32"x1/4" (STANDARD ORIFICE FOR ITEM ID) 1/2" (STANDARD ORIFICE FOR ITEM ID) CHANGE ORIFICE TO 7/32"x1/4" ITEM ID 357180 FOR S-302 AND 357188 FOR ACTARIS B34SR
99/124 PSIG INLET	1-1/4" S-102K/B42 ITEM ID 357046 2" S302/B34SR ITEM ID 357021	1/8" (STANDARD ORIFICE FOR ITEM ID) CHANGE ORIFICE TO 5/32"X3/16" ITEM ID 357178 FOR S-302 AND 357187 FOR ACTARIS B34SR

nationalgrid
LONG ISLAND

OUTDOOR METER SET
CLASS 750/800/1000
LP-124 PSIG SERVICES
LOW PRESSURE & 1/2 PSIG OUTLETS

REVISIONS: REVISED NOTE L TO CLARIFY MINIMUM VENT HEIGHT

DATE: 04/29/2004
EFFECTIVE DATE: 05/01/2006
DESIGN: PAUL GUGLIOTTA
DRAWN: PAUL GUGLIOTTA
STD. DWG. NO. MTRS-6185

NO.	ITEM	1 ¼" SERVICE	QTY	1 ½" SERVICE	QTY	2" SERVICE	QTY	SUPPLIED BY
27	UNION – 1-1/4" GALVANIZED NON-INSUL.		1		1		1	CUSTOMER
26	NIPPLE 1-1/4" X 2 ½" LONG LENGTH, GALV, SCH 40		9		9		9	CUSTOMER
25	ITEM DELETED		0		0		0	CUSTOMER
24	ITEM NOT NEEDED FOR CLASS 800 METER		0		0		0	CUSTOMER
23	REDUCER 1 ¼" X 2" GALV. (FOR 1 ¼" SERVICES THAT USE 2" REGULATOR)	356038	1		0		0	NAT. GRID
22	NIPPLE – 1-1/4" X AS REQUIRED LENGTH,GALV, SCH 40		2		2		2	CUSTOMER
21	TEE – 1-1/4" X ¾" X 1-1/4" – HEEL – M.I. GALV., THREADED		1		1		1	CUSTOMER
20	VALVE LOCKWING, MUELLER TAMPER-PROOF H-11118 – LOCK CLOSED ¾"		1		1		1	CUSTOMER
19	NIPPLE ¾" X 4" GALV. SCH. 40		1		1		1	CUSTOMER
18	PLUG – ¾" GALV.		1		1		1	CUSTOMER
17	LOCK		3		3		3	NAT. GRID
16	NIPPLE 1 ¼". 1 ½" OR 2" X 3" LONG, GALV. SCH. 40		1		1		1	CUSTOMER
15	ELBOW 1-1/4" GALV. 90 DEGREE		5		5		5	CUSTOMER
14	RUBBER WASHER FOR METER SWIVEL	366041	2	366041	2	366041	2	NAT. GRID
13	METER VALVE - LOCK WING – 1-1/4"	315013	3	315013	3	315013	3	CUSTOMER
12	METER SWIVEL 1 ¼" X 45 LIGHT	366007	2	366007	2	366007	2	NAT. GRID
11	METER NUT GALV. 45 LT	345011	2	345011	2	345011	2	NAT. GRID
10	A. REGULATOR 2" SCR'D FISHER S302/ACTARIS B34SR (5"-9" OUTLET SPRING RANGE) OR B. REGULATOR 1 ½" SCR'D FISHER S302 /ACTARIS B34SR (5"-9" OUTLET SPRING RANGE) SEE NOTE "K" C. REGULATOR 1 ¼" SCR'D FISHER S102K/ACTARIS B42 1/8" ORIF. OR EQ. FOR 99 AND 124 PSIG SERVICES ONLY D. REGULATOR 1 ¼" SCR'D ACTARIS B31R WITH 3/16" ORIFICE FOR 60 PSIG MAX	SEE TABLE ON PG 1	1	SEE TABLE ON PG 1	1	SEE TABLE ON PG 1	1	NAT. GRID NAT. GRID NAT. GRID
9	METER CLASS 800		1		1		1	NAT. GRID
8	UNION – INSULTAING GALV. 1-1/4", 1 ½" OR 2"	380006	1	380007	1	380008	1	NAT. GRID
7	NIPPLE – LENGTH AS REQUIRED X REGULATOR SIZE OR RISER SIZE FOR LOW PRESSURE SERVICES		1		1		1	NAT. GRID
6	ELBOW 1 – ½" X 1-1/4" GALV. 90 DEGREE, THREADED FOR 1 – ½" REGULATORS ELBOW 2" X 1-1/4" GALV. 90 DEGREE, THREADED – FOR 2" REGULATORS ELBOW 1 – ¼" GALV. 90 DEGREE, THREADED FOR 1 ¼" REGULATORS		- - 1		1 - -		- 1 -	CUSTOMER
5	PLUG VALVE – SERVICE SIZE 1-¼", 1-½" OR 2" THREADED ENDS. ALTERNATE: 2" FLANGED PLUG VALVE (ITEM 382214 – SEE NOTE R)	315013	1	382211	1	382212 OR 382214	1 1	NAT. GRID NAT. GRID
4	TEE 1-1/4" X 1-1/4" GALV. SCREWED ENDS		2		2		2	CUSTOMER
3	SERVICE LOCATION TAG – LONG ISLAND INSTALLATIONS ONLY	301728	1	301728	1	301728	1	NAT. GRID
2	NIPPLE – SERVICE SIZE X LENGTH AS REQUIRED, GALV. SCH. 40		1		3		3	NAT. GRID
1	RISER	1 ¼"	1	1 ½"	1	2"	1	NAT. GRID
No.	**ITEM**	**NATIONAL GRIDD CODE No.**						

BILL OF MATERIAL FOR CLASS 800 METERS

NO.	ITEM	1 ¼" SERVICE	QTY	1 ½" SERVICE	QTY	2" SERVICE	QTY	SUPPLIED BY
27	UNION 2" – GALVANIZED – NON-NSULATING		1		1		1	CUSTOMER
26	NIPPLE 2" X 2 ½" LONG LENGTH, GALV, SCH 40		11		11		11	CUSTOMER
25	ITEM DELETED		0		0		0	CUSTOMER
24	REDUCER 1 ¼" X 2" GALVANIZED		2		2		2	CUSTOMER
23	REDUCER 1 ¼" X 2" GALV. (FOR 1 ¼" SERVICES THAT USE 2" REGULATOR)	356038	1		0		0	NAT. GRID
22	NIPPLE – 2" X AS REQUIRED LENGTH,GALV, SCH 40		2		2		2	CUSTOMER
21	TEE – 2" X ¾" X 2" – HEEL – M.I. GALV., THREADED		1		1		1	CUSTOMER
20	VALVE LOCKWING, MUELLER TAMPER-PROOF H-11118 – LOCK CLOSED ¾"		1		1		1	CUSTOMER
19	NIPPLE ¾" X 4" GALV. SCH. 40		1		1		1	CUSTOMER
18	PLUG – ¾" GALV.		1		1		1	CUSTOMER
17	LOCK		3		3		3	NAT. GRID
16	NIPPLE 1 ¼". 1 ½" OR 2" X 3" LONG, GALV. SCH. 40		1		1		1	CUSTOMER
15	ELBOW 2" GALV. 90 DEGREE		5		5		5	CUSTOMER
14	RUBBER WASHER FOR METER SWIVEL	366041	2	366041	2	366041	2	NAT. GRID
13	METER VALVE - LOCK WING - 2"	315027	3	315027	3	315027	3	CUSTOMER
12	METER SWIVEL 1 ¼" X 45 LIGHT	366007	2	366007	2	366007	2	NAT. GRID
11	METER NUT GALV. 45 LT	345011	2	345011	2	345011	2	NAT. GRID
10	A. REGULATOR 2" SCR'D FISHER S302/ACTARIS B34SR (5"-9" OUTLET SPRING RANGE) OR B. REGULATOR 1 ½" SCR'D FISHER S302/ACTARIS B34SR (5"-9" OUTLET SPRING RANGE) SEE NOTE "K" C. REGULATOR 1 ¼" SCR'D FISHER S102K/ACTARIS B42 1/8" ORIF. OR EQ. FOR 99 AND 124 PSIG SERVICES ONLY D. REGULATOR 1 ¼" SCR'D ACTARIS B31R WITH 3/16" ORIFICE FOR 60 PSIG MAX	SEE TABLE ON PG 1	1	SEE TABLE ON PG 1	1	SEE TABLE ON PG 1	1	NAT. GRID NAT. GRID NAT. GRID
9	METER CLASS 1000		1		1		1	NAT. GRID
8	UNION – INSULTAING GALV. 1-1/4" ,1 ½" OR 2"	380006	1	380007	1	380008	1	NAT. GRID
7	NIPPLE – LENGTH AS REQUIRED X REGULATOR SIZE OR RISER SIZE X 2" FOR LOW PRESSURE SERVICES		1		1		1	NAT. GRID
6	ELBOW – 1 – ½" X 2" GALV. 90 DEGREE, THREADED FOR 1 – ½" REGULATORS ELBOW – 2" GALV. 90 DEGREE, THREADED – FOR 2" AND L.P. SERVICES ELBOW – 1 – ¼" X 2" GALV. 90 DEGREE, THREADED FOR 1 ¼" REGULATORS		- - 1		1 - -		- 1 -	CUSTOMER
5	PLUG VALVE – SERVICE SIZE 1-¼", 1-½" OR 2" THREADED ENDS. ALTERNATE: 2" FLANGED PLUG VALVE (ITEM 382214 – SEE NOTE R)	315013	1	382211	1	382212 OR 382214	1 1	NAT. GRID NAT. GRID
4	TEE 2" X 2" GALV. SCREWED ENDS		2		2		2	CUSTOMER
3	SERVICE LOCATION TAG – LONG ISLAND INSTALLATIONS ONLY	301728	1	301728	1	301728	1	NAT. GRID
2	NIPPLE – SERVICE SIZE X LENGTH AS REQUIRED, GALV. SCH. 40		1		3		3	NAT. GRID
1	RISER	1 ¼"	1	1 ½"	1	2"	1	NAT. GRID
No.	**ITEM**	**NATIONAL GRID CODE No.**						

BILL OF MATERIAL FOR CLASS 1000 METERS

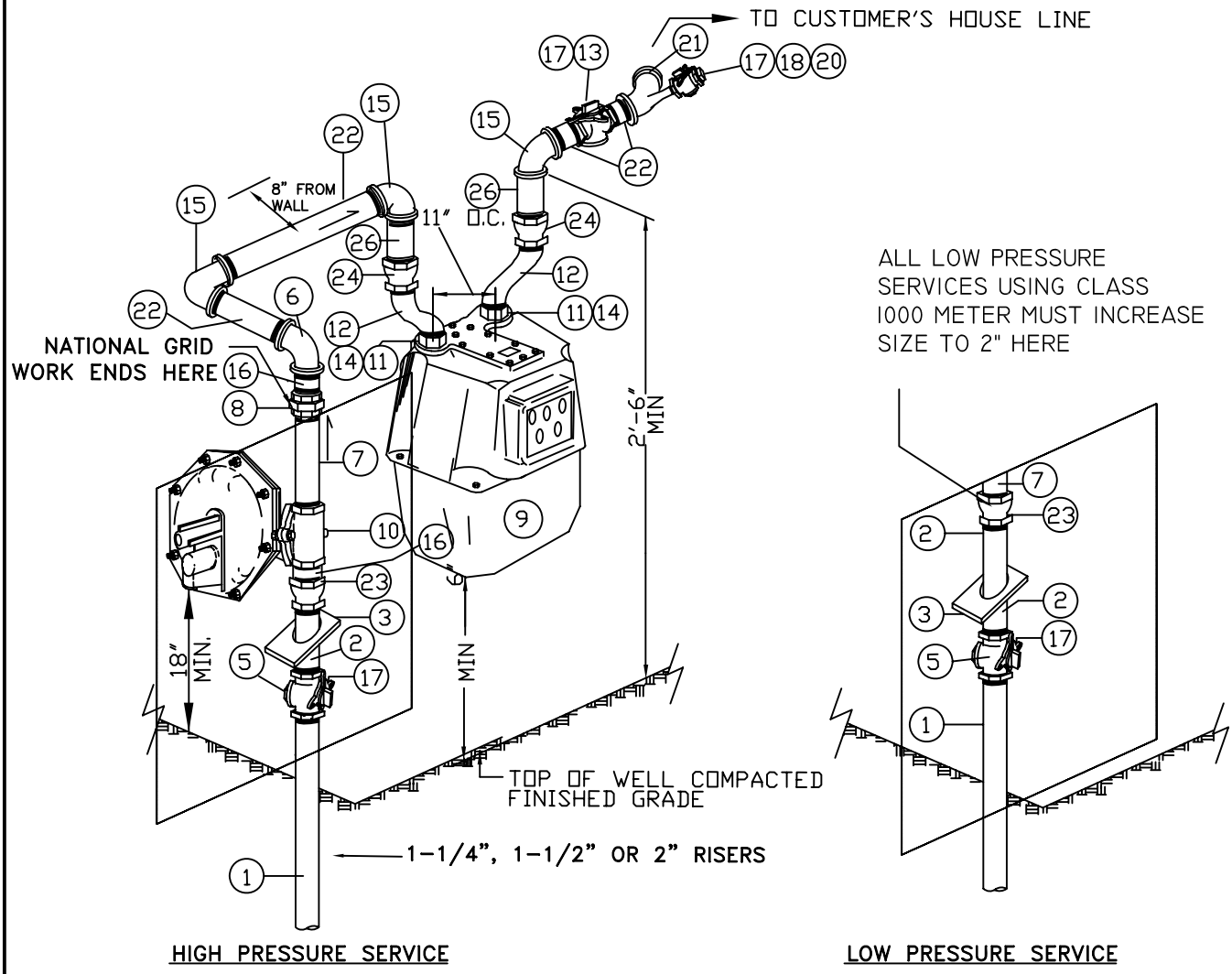

FIGURE 2 – NO BYPASS

REGULATOR SELECTION – SEE NOTE "K"

INLET PRESSURE	REGULATOR	ORIFICE REQUIREMENTS
30/60 PSIG INLET	1-1/4" B-31R ITEM ID 357519 2" S-302/B34SR ITEM ID 357021 OR 2" B34-IMRV ITEM ID 357025 OR 1-1/2" S302/B34SR ITEM ID 357039	3/16" (STANDARD ORIFICE FOR ITEM ID) 7/32"x1/4" (STANDARD ORIFICE FOR ITEM ID) 1/2" (STANDARD ORIFICE FOR ITEM ID) CHANGE ORIFICE TO 7/32"x1/4" ITEM ID 357180 FOR S-302 AND 357188 FOR ACTARIS B34SR
99/124 PSIG INLET	1-1/4" S-102K/B42 ITEM ID 357046 2" S302/B34SR ITEM ID 357021	1/8" (STANDARD ORIFICE FOR ITEM ID) CHANGE ORIFICE TO 5/32"X3/16" ITEM ID 357178 FOR S-302 AND 357187 FOR ACTARIS B34SR

NO.	ITEM	1 ¼" SERVICE	QTY	1 ½" SERVICE	QTY	2" SERVICE	QTY	SUPPLIED BY
26	NIPPLE 1-1/4" X 2 ½" LONG LENGTH, GALV, SCH 40		2		2		2	CUSTOMER
25	ITEM DELETED		0		0		0	CUSTOMER
24	COUPLING 1 ¼" GALVANIZED		2		2		2	CUSTOMER
23	REDUCER 1 ¼" X 2" GALV. (FOR 1 ¼" SERVICES THAT USE 2" REGULATOR)	356038	1		0		0	NAT. GRID
22	NIPPLE – 1-1/4" X AS REQUIRED LENGTH,GALV, SCH 40		4		4		4	CUSTOMER
21	TEE – 1-1/4" X ¾" X 1-1/4" – HEEL – M.I. GALV., THREADED		1		1		1	CUSTOMER
20	VALVE LOCKWING, MUELLER TAMPER-PROOF H-11118 – LOCK CLOSED ¾"		1		1		1	CUSTOMER
19	NIPPLE ¾" X 4" GALV. SCH. 40		1		1		1	CUSTOMER
18	PLUG – ¾" GALV.		1		1		1	CUSTOMER
17	LOCK		2		2		2	NAT. GRID
16	NIPPLE 1 ¼". 1 ½" OR 2" X 3" LONG, GALV. SCH. 40		1		1		1	CUSTOMER
15	ELBOW 1-1/4" GALV. 90 DEGREE		3		3		3	CUSTOMER
14	RUBBER WASHER FOR METER SWIVEL	366041	2	366041	2	366041	2	NAT. GRID
13	ITEM DELETED							
12	METER SWIVEL 1 ¼" X 45 LIGHT	366007	2	366007	2	366007	2	NAT. GRID
11	METER NUT GALV. 45 LT	345011	2	345011	2	345011	2	NAT. GRID
10	A. REGULATOR 2" SCR'D FISHER S302/ACTARIS B34SR (5"-9" OUTLET SPRING RANGE) B. REGULATOR 1 ½" SCR'D FISHER S302/ACTARIS B34SR (5"-9" OUTLET SPRING RANGE) SEE NOTE "K" C. REGULATOR 1 ¼" SCR'D FISHER S102K OR EQ. FOR 99 AND 124 PSIG SERVICES ONLY D. REGULATOR 1 ¼" SCR'D ACTARIS B31R WITH 3/16" ORIFICE FOR 60 PSIG MAX	SEE TABLE ON PG 1	1	SEE TABLE ON PG 1	1	SEE TABLE ON PG 1	1	NAT. GRID
9	METER CLASS 800		1		1		1	NAT. GRID
8	UNION – INSULTAING GALV. 1 ½" , 1 ¼" OR 2"	380006	1	380007	1	380008	1	NAT. GRID
7	NIPPLE – LENGTH AS REQUIRED X REGULATOR SIZE OR RISER SIZE FOR LOW PRESSURE SERVICES		1		1		1	NAT. GRID
6	ELBOW – 1 – ½" X 1-1/4" GALV. 90 DEGREE, THREADED FOR 1 – ½" REGULATORS ELBOW – 2" X 1-1/4" GALV. 90 DEGREE, THREADED – FOR 2" REGULATORS ELBOW – 1 – ¼" GALV. 90 DEGREE, THREADED FOR 1 ¼" REGULATORS		- - 1		1 - -		- 1 -	CUSTOMER
5	PLUG VALVE – SERVICE SIZE 1 – ¼", 1 ½" OR 2" THREADED ENDS. ALTERNATE: 2" FLANGED PLUG VALVE (ITEM 382214 – SEE NOTE R)	315013	1	382211	1	382212 OR 382214	1 1	NAT. GRID NAT. GRID
4	ITEM DELETED		0		0		0	CUSTOMER
3	SERVICE LOCATION TAG – LONG ISLAND INSTALLATIONS ONLY	301728	1	301728	1	301728	1	NAT. GRID
2	NIPPLE – SERVICE SIZE X LENGTH AS REQUIRED, GALV. SCH. 40		1		1		1	NAT. GRID
1	RISER	1 ¼"	1	1 ½"	1	2"	1	NAT. GRID
No.	**ITEM**	**NATIONAL GRID CODE No.**						

BILL OF MATERIAL FOR CLASS 800 METER FIGURE 2 (WITHOUT BYPASS)

NO.	ITEM	1 ¼" SERVICE	QTY	1 ½" SERVICE	QTY	2" SERVICE	QTY	SUPPLIED BY
26	NIPPLE 2" X 2 ½" LONG LENGTH, GALV, SCH 40		2		2		2	CUSTOMER
25	NIPPLE 2" X 4" LONG LENGTH, GALV, SCH 40		2		2		2	CUSTOMER
24	REDUCER 1 ¼" X 2" GALVANIZED		2		2		2	CUSTOMER
23	REDUCER 1 ¼" X 2" GALV. (FOR 1 ¼" SERVICES THAT USE 2" REGULATOR)	356038	1		0		0	NAT. GRID
22	NIPPLE – 2" X AS REQUIRED LENGTH,GALV, SCH 40		3		3		3	CUSTOMER
21	TEE – 2" X ¾" X 2" – HEEL – M.I. GALV., THREADED		1		1		1	CUSTOMER
20	VALVE LOCKWING, MUELLER TAMPER-PROOF H-11118 – LOCK CLOSED ¾"		1		1		1	CUSTOMER
19	NIPPLE ¾" X 4" GALV. SCH. 40		1		1		1	CUSTOMER
18	PLUG – ¾" GALV.		1		1		1	CUSTOMER
17	LOCK		2		2		2	NAT. GRID
16	NIPPLE 1 ¼". 1 ½" OR 2" X 3" LONG, GALV. SCH. 40		1		1		1	CUSTOMER
15	ELBOW 2" GALV. 90 DEGREE		3		3		3	CUSTOMER
14	RUBBER WASHER FOR METER SWIVEL	366041	2	366041	2	366041	2	NAT. GRID
13	ITEM DELETED							
12	METER SWIVEL 1 ¼" X 45 LIGHT	366007	2	366007	2	366007	2	NAT. GRID
11	METER NUT GALV. 45 LT	345011	2	345011	2	345011	2	NAT. GRID
10	A. REGULATOR 2" SCR'D FISHER S302/ACTARIS B34SR (5"-9" OUTLET SPRING RANGE) B. REGULATOR 1 ½" SCR'D FISHER S302/ACTARIS B34SR (5"-9" OUTLET SPRING RANGE) SEE NOTE "K" C. REGULATOR 1 ¼" SCR'D FISHER S102K OR EQ. FOR 99 AND 124 PSIG SERVICES ONLY D. REGULATOR 1 ¼" SCR'D ACTARIS B31R WITH 3/16" ORIFICE FOR 60 PSIG MAX	SEE TABLE ON PG 1	1	SEE TABLE ON PG 1	1	SEE TABLE ON PG 1	1	NAT. GRID
9	METER CLASS 1000		1		1		1	NAT. GRID
8	UNION – INSULTAING GALV. 1 ½" , 1 ¼" OR 2"	380006	1	380007	1	380008	1	NAT. GRID
7	NIPPLE – LENGTH AS REQUIRED X REGULATOR SIZE OR RISER SIZE FOR LOW PRESSURE SERVICES		1		1		1	NAT. GRID
6	ELBOW – 1 – ½" X 2" GALV. 90 DEGREE, THREADED FOR 1 – ½" AND 1 – ¼" HP SERVICES ELBOW – 2" GALV. 90 DEGREE, THREADED – FOR 2" SERVICES ELBOW – 1 – ¼" X 2" GALV. 90 DEGREE, THREADED FOR 1 ¼" REGULATORS		- - 1		1 - -		- 1 -	CUSTOMER
5	PLUG VALVE – SERVICE SIZE 1 – ¼", 1 ½" OR 2" THREADED ENDS. ALTERNATE: 2" FLANGED PLUG VALVE (ITEM 382214 – SEE NOTE R)	315013	1	382211	1	382212 OR 382214	1 1	NAT. GRID NAT. GRID
4	TEE 2" X 2" GALV. SCREWED ENDS		0		0		0	CUSTOMER
3	SERVICE LOCATION TAG – LONG ISLAND INSTALLATIONS ONLY	301728	1	301728	1	301728	1	NAT. GRID
2	NIPPLE – SERVICE SIZE X LENGTH AS REQUIRED, GALV. SCH. 40		1		1		1	NAT. GRID
1	RISER	1 ¼"	1	1 ½"	1	2"	1	NAT. GRID
No.	**ITEM**	**NATIONAL GRID CODE No.**						

BILL OF MATERIAL FOR CLASS 1000 METER FIGURE 2 (WITHOUT BYPASS)

NOTES:

A. NATIONAL GRID REQUIREMENTS FOR THE CONSTRUCTION OF METER HEADERS AND METER INSTALLATION ARE CONTAINED IN NATIONAL GRID'S SPECIFICATIONS CUST-5235 AND THE NATIONAL GRID BLUE BOOK.
B. WHERE VEHICULAR TRAFFIC IS A CONCERN, INSTALL PROTECTION POSTS. SEE APPROVED NATIONAL GRID SPECIFICATION FOR PROTECTION POST INSTALLATION REQUIREMENTS AND SPECIFICATIONS.
C. METERS AND SAFETY DEVICES MUST BE PROTECTED FROM DAMAGE DURING PRESSURE TEST.
D. ADDITIONAL FITTINGS MAY BE REQUIRED TO MAKE THE METER INSTALLATION.
E. NATIONAL GRID SHALL NOT BE RESPONSIBLE FOR FITTING DIMENSIONS OR FOR SCALED DIMENSIONS.
F. IF BRANCH LOAD IS REQUIRED, SEE APPROPRIATE NATIONAL GRID DRAWINGS FOR METER SIZING, PIPE DESIGN AND VALVE REQUIREMENTS. BRANCH PIPING IS TO BE ELECTRICALLY INSULATED FROM DISTRIBUTION PIPING AT VALVE.
G. COAT ALL NON-GALVANIZED PIPE AND FITTINGS WITH RUSTOLEUM #7715 OR EQUAL. TWO COATS REQUIRED, BRUSH APPLIED.
H. FOR UNDERGROUND PIPING AFTER METER, CONTACT CORROSION CONTROL SECTION FOR NATIONAL GRID'S REQUIREMENTS.
I. ALL MAXIMUM CFH'S ARE MEASURED AT 1.0" WATER COLUMN DROP ACROSS THE METER.
J. A FULLY ENCLOSED (INCLUDING TOP) CHAIN LINK FENCE (CYCLONE) MINIMUM 8FT. HIGH WITH GATE AND LOCK MAY BE REQUIRED ON OUTSIDE SETS DEPENDING ON LOCATION. TO BE SUPPLIED BY CUSTOMER.
K. THE 2" S-302 OR ACTARIS B34 SR REGULATOR COMES STANDARD WITH A 7/32" X ¼" ORIFICE (60# MAX.). THE 1-1/2" S-302 OF ACTARIS B34SR REGULATOR COMES STANDARD WITH A 3/8" ORIFICE (15# MAX.).
FOR 99 AND 124 PSIG INLET PRESSURES INSTALL A 1-1/2" OR A 2" S-302 OR B34SR REGULATOR AND CHANGE THE ORIFICE TO 5/32"X 3/16" ORIFICE (ITEM ID 357181 FOR FISHER S302 OR ITEM ID 357187 FOR ACTARIS B34SR) . FAILURE TO CHANGE THE ORIFICE WILL CAUSE DAMAGE TO THE REGULATOR. AN ALTERNATE OPTION ON THE 99#/124# SYSTEM IS TO USE THE 1- ¼" FISHER S-102K, FISHER HSR OR ACTARIS B-42R WITH 1/8" ORIFICE (ITEM ID 357046).
FOR 60 PSIG SYSTEMS INSTALL AN 1-1/4" ACTARIS B-31R REGULATOR (ITEM I D 357519) OR INSTALL A 2" S-302 / B34SR WHICH HAS A 7/32" X ¼" ORIFICE OR INSTALL A 1-/2" S-302/ACTARIS B34SR1 AND CHANGE THE ORIFICE TO 7/32" X 1/4" (ITEM ID 357180 FOR FISHER AND ITEM ID 357188 FOR ACTARIS). A 2" B34IMRV (ITEM ID 357025) IS ALSO ACCEPTABLE FOR 60 PSIG INLETS.
FOR 15 PSIG SERVICE, INSTALL AN 1 ½" S-302 OR ACTARIS B34SR WHICH HAS A 3/8" DIAM. ORIFICE. OR USE A 2" S-302 OR ACTARIS B34SR AND CHANGE THE ORIFICE TO 3/8" (ITEM ID 357178 FOR FISHER S302 OR ITEM ID 357184 FOR ACTARIS B34SR). THIS REGULATOR HAS A MAX. INLET PRESSURE OF 15 PSIG.
L. THE REGULATOR VENT ASSEMBLY MUST BE FACE DOWN AND EQUIPPED WITH A RAIN AND INSECT RESISTANT SCREEN. FOR NEW CONSTRUCTION OR ALTERATIONS SEE SERV-6225 VENT PIPING LOCATION. IN GENERAL REGULATOR VENT PIPING SHALL BE A MINIMUM OF 18 INCHES ABOVE GRADE. IN AREAS OF KNOWN FLOODING THE VENT PIPING SHOULD BE A MINIMUM OF 18 INCHES ABOVE THE EXPECTED HEIGHT OF THE FLOODWATERS. A MINIMUM OF 18 INCHES MUST BE MAINTAINED FROM ANY OPENING WHERE GAS MAY ENTER THE PREMISE.
M. ALL PIPING SHALL BE IN COMPLIANCE WITH NFPA 54.
N. RISER SHALL BE A MINIMUM OF 12" FROM THE OUTSIDE BUILDING FOUNDATION WALL.
O. THE METER AND ASSOCIATED PIPING SHALL BE PLUMB AND LEVEL FROM BOTH FRONT AND SIDE.
P. ALL FITTINGS SHALL BE GALVANIZED OR BLACK PIPE PRIMED AND PAINTED.
Q. SERVICE LOCATION TAGS ARE REQUIRED ON LONG ISLAND INSTALLATIONS ONLY.
R. WHEN USING A 2" FLANGED VALVE, USE THE FOLLOWING:
   2" INSULATING FLANGED KIT QTY 1 – ITEM ID 333017
   2" THREADED NIPPLE WITH FLANGE QTY 1 – ITEM ID 343005
   MACHINE BOLTS – 5/8" X 2 – ¾" QTY – ITEM ID 309303
S. AT FLOW RATES OF 700 CFH AND 800 CFH, THE PRESSURE DROP OF THE 800 METER SET WITH THE BYPASS IS APPROXIMATELY 1.5" W.C. (INCLUDING THE METER). ON LOW PRESSURE SYSTEMS, WHERE TOTAL CONNECTED LOAD APPROACHES 800 CFH, IT IS RECOMMENDED TO USE 2" PIPING.
T. FOR 14" W.C. (1/2 PSIG) METERING, CONTACT METER OPERATIONS FOR PROPER METER WITH INDEX.
U. FOR 14" METERING, THE REGULATOR SPRING MUST BE CHANGED.

Vent Line Pipe Size	
Length	Pipe Size
0' – 50'	1 – ½"
50'– 100'	2"
>100'	Cont. Gas Eng.

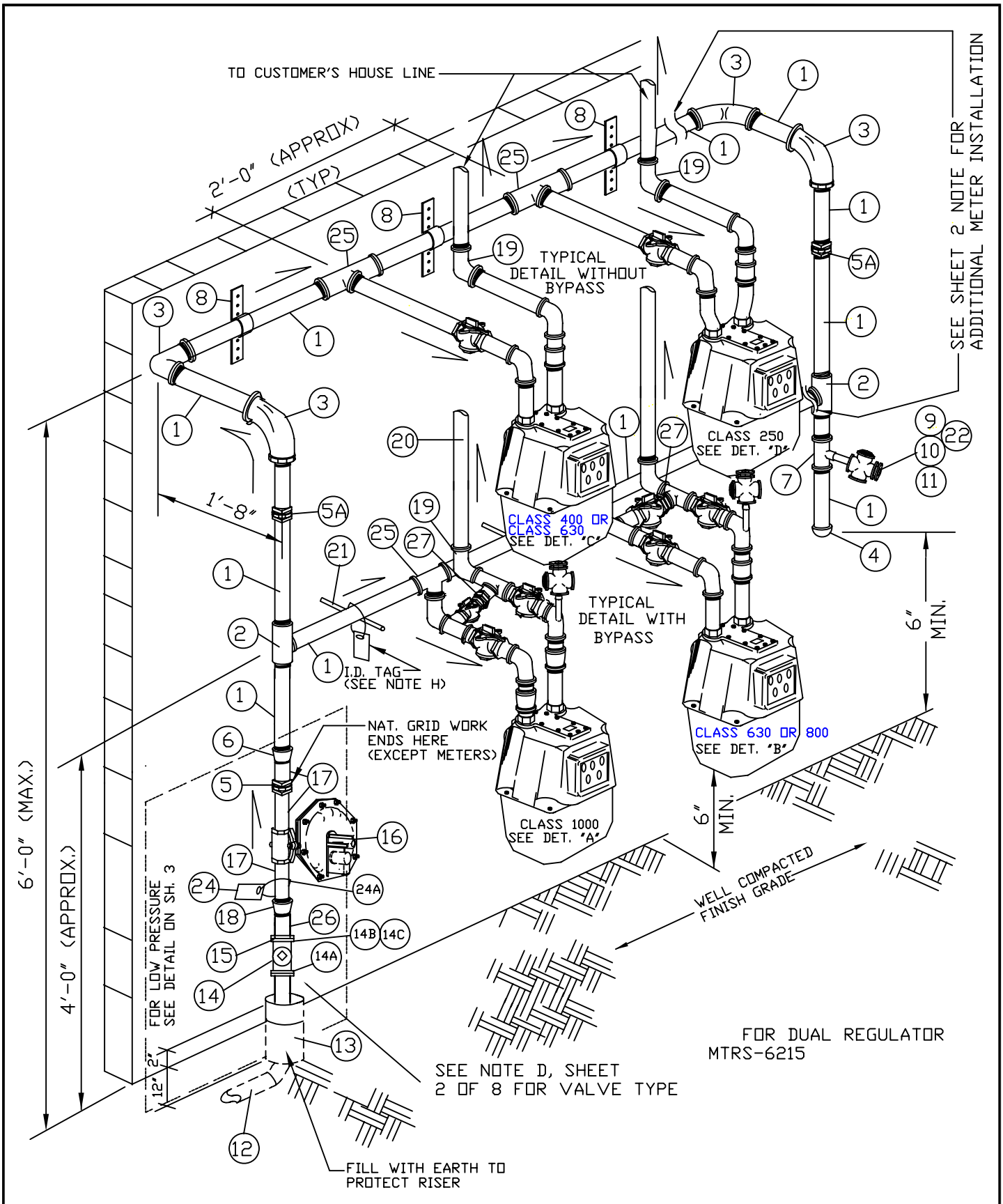

nationalgrid LONG ISLAND

TYPICAL MULTIMETER CONFIGURATION FOR CLASS 250, 400, 630, 800 AND 1000 WITH SINGLE REGULATOR

REVISIONS: ADDED 630 WITH AND WITHOUT BYPASS

DATE: 07/10/2004	EFFECTIVE DATE: 01/18/2007
DESIGN: MLoP	STD. DWG. NO. **MTRS-6215**
DRAWN: MLoP	

BILL OF MATERIAL		APPLICATION FOR FOUR (4) METER SETS	
ITEM. NO.	DESCRIPTION	QUAN-TITY	ITEM ID
1	PIPE SIZE AND LENGTH AS REQ'D (SEE SHEET 3)	+	✳✳
2	TEE (EQUAL TO SIZE OF HEADER)	2	✳✳
3	ELBOW - 90°	4	✳✳
4	CAP - SIZE AS REQUIRED	1	✳✳
5	UNION - INSULATED (ONLY IF SCREWED VALVE IS USED)	1	✳✳
5A	UNION (PLUMBER'S OPTION)	2	✳✳
6	REDUCER (IF REQUIRED)	1	✳✳
7	TEE - BULL , SIZE AS REQUIRED	1	✳✳
8	1 5/8" UNISTRUT CHANNEL W/CLAMP	+	✳✳
9	NIPPLE 3/4"X 3"	1	✳✳
10	VALVE - LOCKWING 3/4"	1	✳✳
11	PLUG SCREWED 3/4"	1	✳✳
12	RISER - SERVICE (PRIMED & PAINTED) SIZE AS REQUIRED	1	NAT. GRID
13	SLEEVE - PIPE , PLASTIC OR EQUIVALENT	1	NAT. GRID
14	VALVE (SEE NOTE BELOW)	1	NAT. GRID
14A	GASKET - SET - INSULATED FLANGE KIT (FOR FLANGE VALVE)	1	NAT. GRID
14B	BOLTS MACHINE (5/8"X 2 3/4") A307	8	309303
14C	FLANGE - WELD NECK (FOR FLANGED TYPE VALVE ONLY)	2	NAT. GRID
15	GASKET - RING FOR FLANGE VALVES	1	NAT. GRID
16	REGULATOR - 1 1/4" OR 2" RELIEF/MONITOR	1	✳
17	NIPPLE	+	NAT. GRID
18	REDUCER (IF REQUIRED)	1	NAT. GRID
19	ELBOW - SIZE AND QUANTITY AS REQ'D	+	✳✳
20	PIPE - HOUSE LINE SIZE AND QUANTITY AS REQ'D	+	✳✳
21	SUPPORT - PIPE OR ROD 1"	+	✳✳
22	GAS SNAP LOCK	1	136506
23	NOT TO BE USED	–	-
24	TAG - GAS SERVICE LOCATION (CPR TAG)	1	301728
24A	SELF LOCKING NYLON STRIP 14"	1	101003
25	TEE- 1 PER METER, SIZE AS REQUIRED (SEE DET. A,B,C,D,E)	+	✳✳
26	NIPPLE- AS REQUIRED	+	✳✳
27	UNION - 2" FOR 1000 METER/ 1-1/4" FOR 630/750/800 METER - GALV.	1	✳✳
44	REDUCER - 2" X 1-1/4"	2	✳✳

LEGEND:

+ - AS REQUIRED
++ - TO BE SUPPLIED BY NATIONAL GRID.
✳✳ - SUPPLIED BY CUSTOMER
✳ - SEE GENG-2010 FOR PROPER REGULATOR AND SELECTION & SIZING.

NOTES (FOR SHEET 1)

A - FOR ITEM ID'S ON ITEMS 28 THRU 43 SEE SHEETS 4 THRU 7 WHICHEVER APPROPRIATE CLASS OF METER APPLIES

B - NATIONAL GRID WILL SUPPLY AND INSTALL ITEMS 12 THRU 18 AND ITEMS 22 THRU 24A.

C - SEE SHEET 3 FOR DIFFERENT METER HEADER PIPE SIZES.

D - USE SCREW TYPE VALVE FOR 1-1/4" RISER, FOR 2" RISER USE FLANGE TYPE VALVE. IF A SCREW VALVE IS USED, ITEMS 14A,14B, 14C AND 15 IS NOT REQUIRED.

E - IF ADDITIONAL METER SETS ARE REQUIRED THEN ADD A FULL TEE (ITEM 25) TO TOP OR LOWER MANIFOLD LEVELS SEE SH. 1.

F - 1000 CLASS METERS MUST USE 2" PIPING AND REDUCE DOWN TO 1-1/4" FOR METER CONNECTIONS.

G - ON THE 99 AND 124 PSIG SYSTEMS, THE 2" REGULATOR MUST HAVE THE ORIFICE CHANGED TO 3/8". ON THE 99 AND 124 PSIG SYSTEM, THE 1-1/4" REGULATOR ITEM ID IS 357046.

H - CUSTOMER TO INSTALL PERMANENT BRASS OR ALUMINUM TAG ON EACH METER INDICATING CUSTOMER'S ADDRESS/ STORE #/ APARTMENT #/ OR UNIT. THIS INFORMATION SHALL BE ENGRAVED OR STAMPED ON THE TAG.

FOR LOW PRESSURE SERVICE

(SEE SH.1, FOR INFORMATION NOT SHOWN)

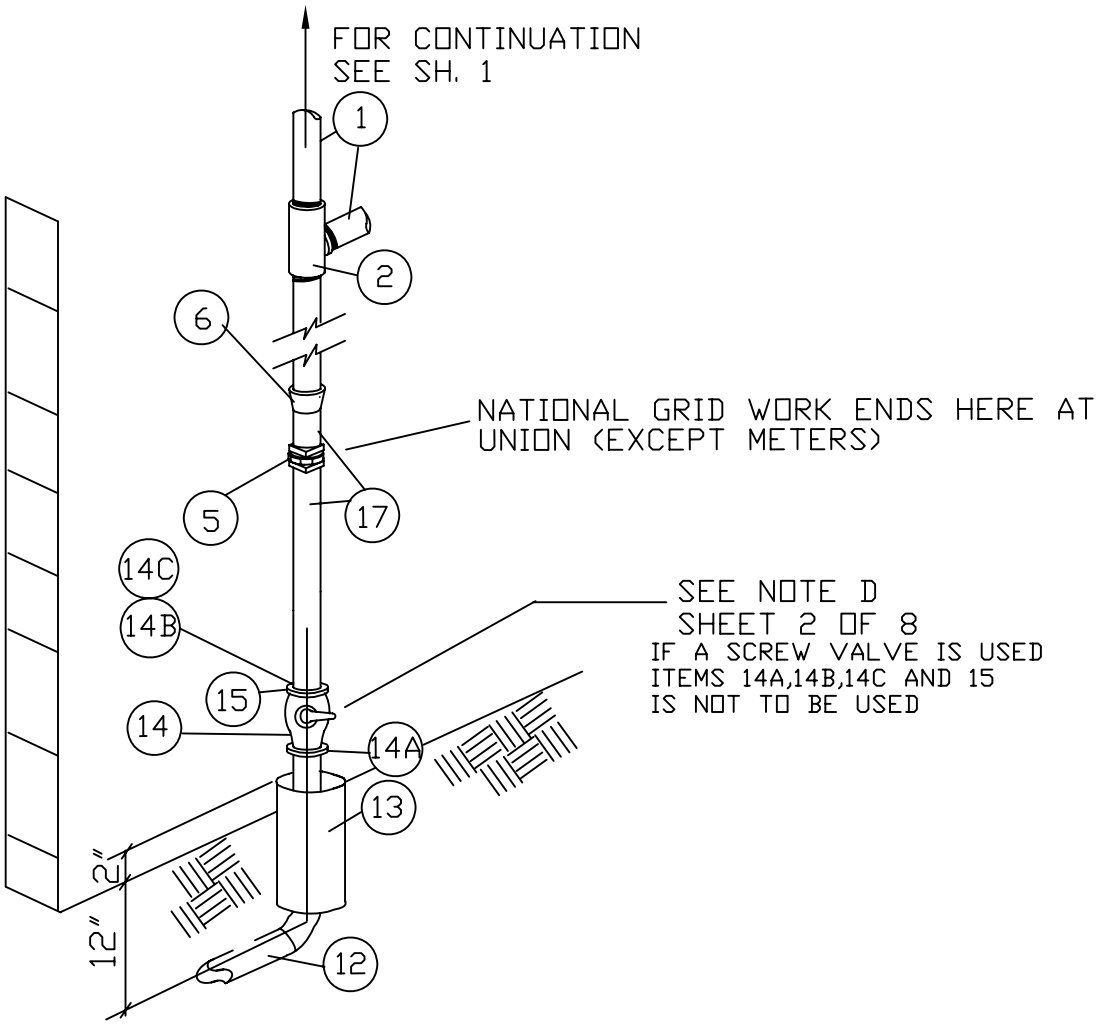

ALLOWABLE LOADS FOR DIFFERENT METER HEADER PIPE SIZES.

PIPE SIZE	1-1/4"	1-1/2"	2"	2-1/2"	3"	4"
MAX. ALLOWABLE LOAD	750 CFH	1350 CFH	2250 CFH	2750 CFH	3700 CFH	4550 CFH

1 –MAXIMUM CAPACITY BASED ON PREFERABLY TWO ROWS. LAYOUT AS SHOWN ON MTRS–6215 AND MTRS–6225 ONLY.

2 –FOR A SINGLE TIER LAYOUT, SEE MTRS–6075

3 –THE METER CLASS SHALL BE USED AS INDICATED IN MTRS–6075, SHEET 1 OF 2. SPECIAL ATTENTION IS REQUIRED ON NOTE A, SHEET 8 OF 8.

4 –THIS LOADING IS THE MAXIMUM THAT SHOULD BE PLACED ON THE SPECIFIED SIZE CUSTOMER INSTALLED PIPING. THE CUSTOMER SHOULD BE ADVISED THAT AN INCREASED SIZE COULD PROVIDE FOR UNKNOWN OR POSSIBLE INCREASED LOAD.

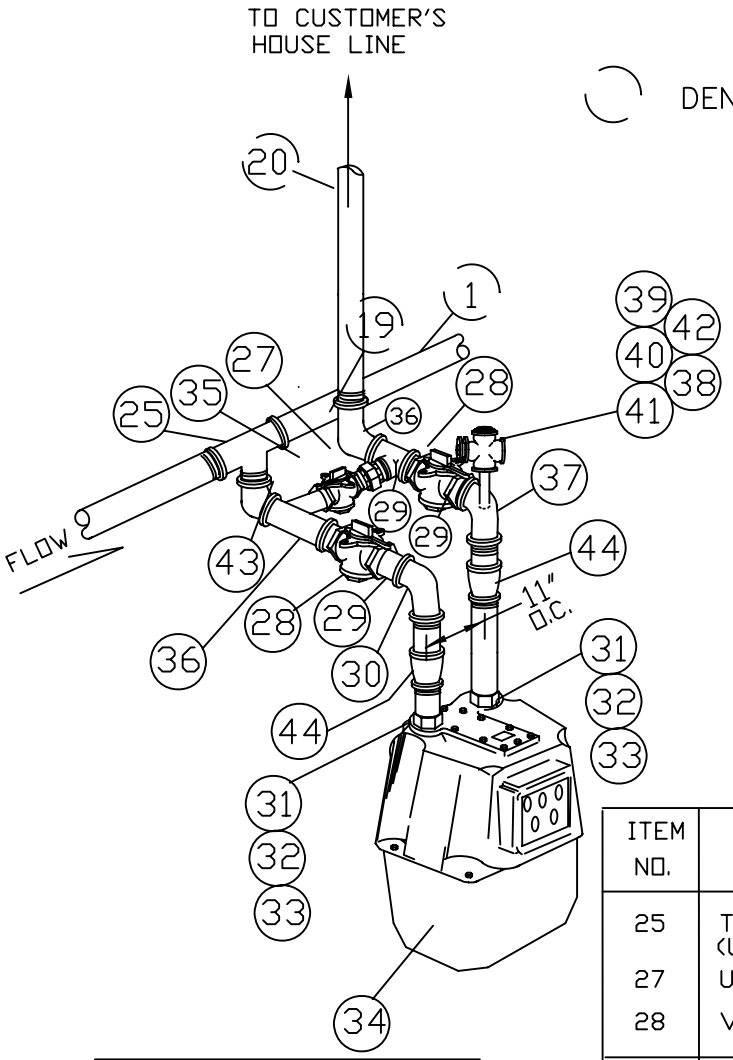

DETAIL "A"

CLASS 1000 METER AND CLASS 800 METER ON LOW PRESSURE SERVICES

ITEM NO.	DESCRIPTION	QUANTITY	ITEM ID
25	TEE : SIZE AS REQUIRED (USE BULL TEE IF NECESSARY)	1	**
27	UNION - 2"	1	**
28	VALVE - LOCKWING - 2"	2	**
29	NIPPLE 2"	+	**
30	ELBOW 90° - 2"	2	**
31	SWIVEL - 1-1/4" 45 LT	2	366007
32	NUT - METER - 1000 45 LT	2	345011
33	METER NUT GASKET - 1000	2	366041
34	GAS METER - 1000 CFH	1	++
35	VALVE - LOCKWING 2" BY PASS	1	315027
36	TEE - 3WAY 2"x 2"x 2"	2	**
37	TEE - HEEL 2"x 2"x 3/4"	1	**
38	PLUG SCREW 3/4"	1	**
39	GAS SNAP LOCK	1	136606
40	NOT TO BE USED	-	-
41	NIPPLE 3/4"x 3"	1	**
42	VALVE - LOCKWING 3/4"	1	**
43	NIPPLE 2"	+	**
44	REDUCER 2" X 1-1/4"	2	**

NOTE: NATIONAL GRID WILL SUPPLY AND INSTALL ITEMS 31 THRU 35, 39 AND 40

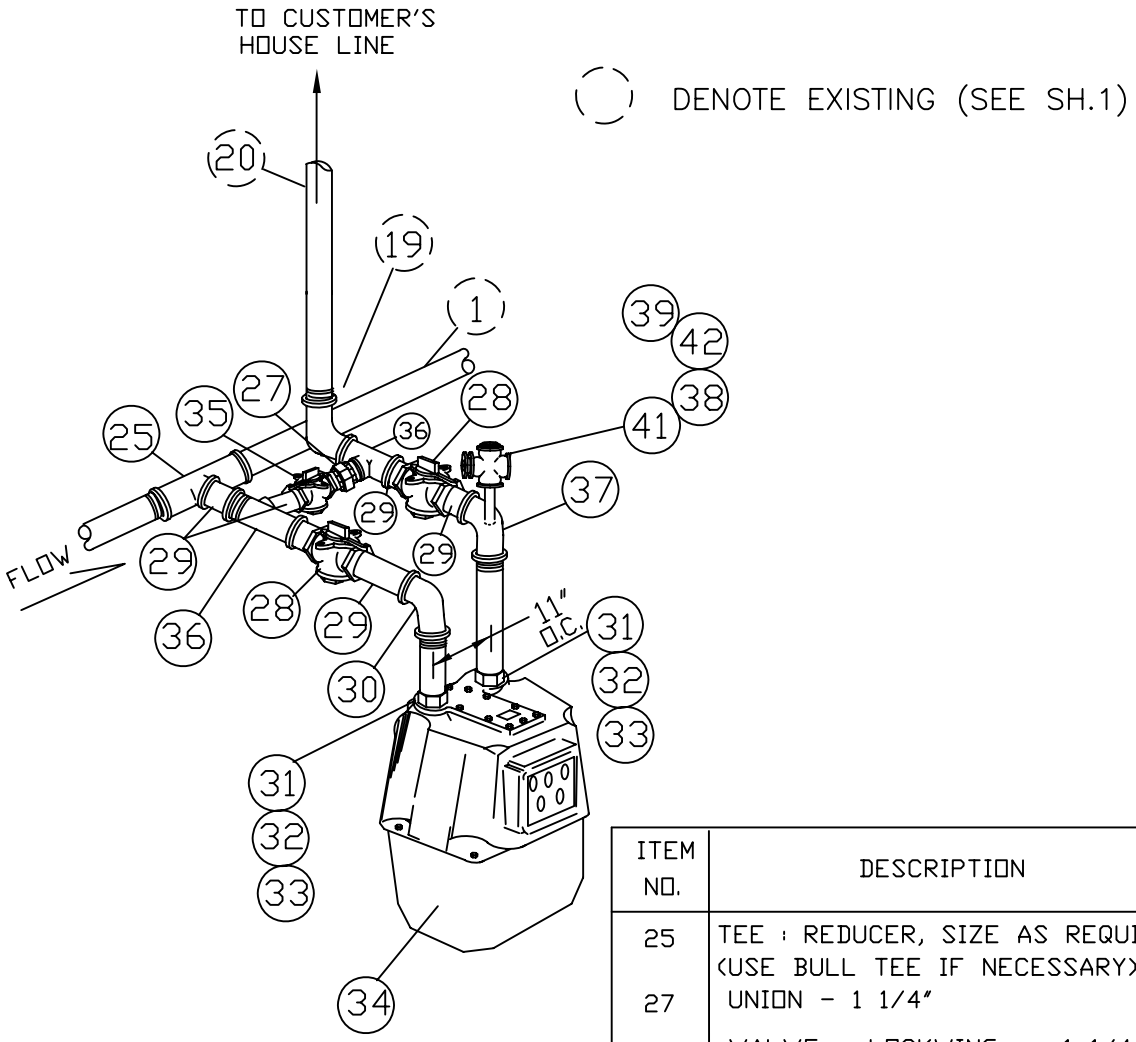

DETAIL "B"
CLASS 630
CLASS 800

NOTE:

FOR LOW PRESSURE SERVICES, 2" PIPING IS RECOMMENDED TO 800 CLASS METER. USE DESIGN FOR 1000 METER ON PAGE 4.

ITEM NO.	DESCRIPTION	QUANTITY	ITEM ID
25	TEE : REDUCER, SIZE AS REQUIRED (USE BULL TEE IF NECESSARY)	1	**
27	UNION - 1 1/4"	1	**
28	VALVE - LOCKWING - 1-1/4"	2	**
29	NIPPLE 1-1/4"	+	**
30	ELBOW 90° - 1-1/4"	1	**
31	SWIVEL-METER-1 1/4"x45 LIGHT	2	366007
32	NUT - METER - 45 LIGHT	2	345011
33	GASKET - METER NUT	2	366041
34	GAS METER CLASS - 630 CFH OR GAS METER CLASS - 800 CFH	1	++
35	VALVE- LOCKWING - 1 1/4"	1	315013
36	TEE 1-1/4"	2	**
37	TEE - HEEL 1-1/4"x 3/4"x 1-1/4"	1	**
38	PLUG SCREW 3/4"	1	**
39	GAS SNAP LOCK	1	136506
40	NOT TO BE USED	-	-
41	NIPPLE 3/4"x 3"	1	**
42	VALVE - LOCKWING 3/4"	1	**

NOTE: NATIONAL GRID WILL SUPPLY AND INSTALL ITEMS 31 THRU 35, 39 AND 40

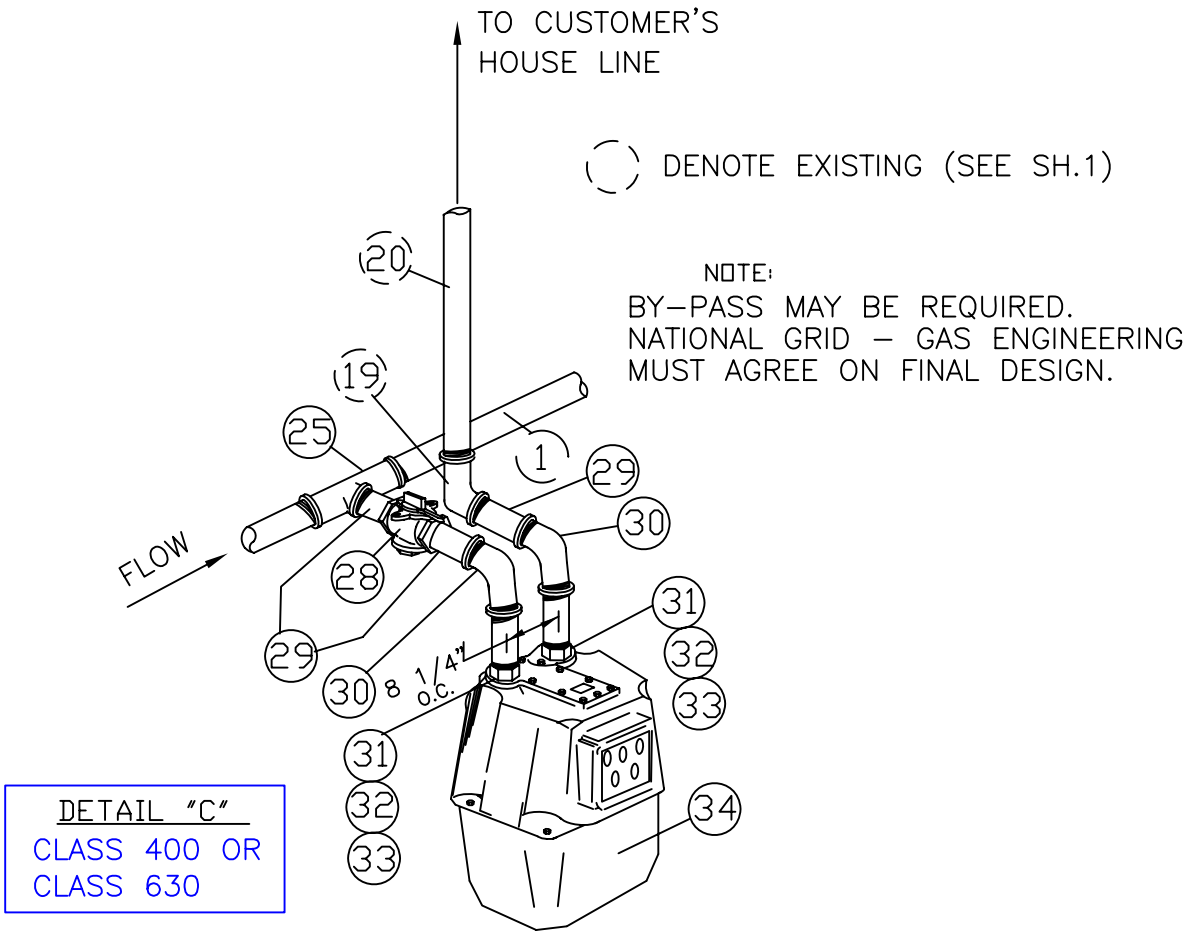

ITEM NO.	DESCRIPTION	QUANTITY	M & S CODE
25	TEE : REDUCER, SIZE AS REQUIRED (USE BULL TEE IF NECESSARY)	1	**
28	VALVE - LOCKWING - 1-1/4"	1	**
29	NIPPLE 1-1/4"	+	**
30	ELBOW 90°- 1-1/4"	2	**
31	SWIVEL METER - 1-1/4"X 45 LIGHT	2	366007
32	METER NUT - 45 LIGHT	2	345011
33	NUT - METER WASHER - 45 LIGHT	2	366041
34	METER - GAS - CLASS - 400 CFH OR METER - GAS - CLASS - 630 CFH	1	++

NOTE: NATIONAL GRID WILL INSTALL AND SUPPLY ITEMS 31 THRU 34

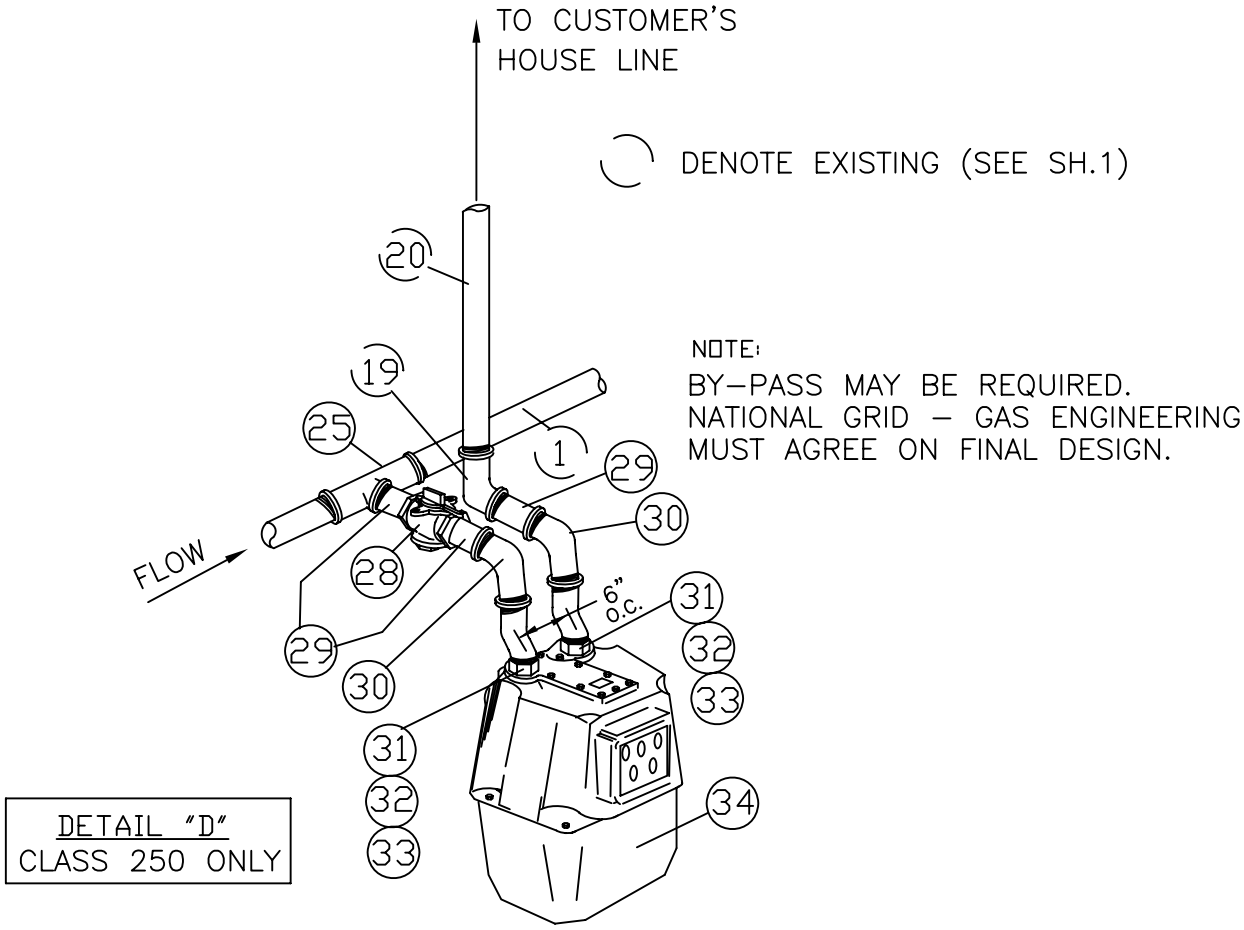

ITEM NO.	DESCRIPTION	QUANTITY	ITEM ID
25	TEE : REDUCER, SIZE AS REQUIRED (USE BULL TEE IF NECESSARY)	1	**
28	VALVE - LOCKWING - 1"	1	**
29	NIPPLE 1"	+	**
30	ELBOW 90° DEGREES- 1"	2	**
31	SWIVEL - METER - 1"X 20 LIGHT	2	366008
32	NUT - METER - 20 LIGHT	2	345003
33	WASHER - METER NUT - 20 LIGHT	2	366039
34	METER - CLASS - 250 CFH	1	++

NOTE: NATIONAL GRID WILL INSTALL AND SUPPLY ITEMS 31 THRU 34

NOTES

A. IT IS PREFERRED TO HAVE THE LARGEST METER PLACED CLOSEST TO THE REGULATOR OUTLET AS SHOWN ON SHEET 1. HOWEVER, THE DETAILS OF EACH METER CAN BE REARRANGED IF THE FIELD CONDITIONS WARRANT IT.

B. FOR ADDITIONAL METER SET LAYOUTS, SEE DETAIL “A”, “B”, “C” AND “D”.

C. FOR ANY MANIFOLD PIPE SIZE, THE ALLOWABLE MAXIMUM LOAD IS SHOWN ON SHEET 3.

D. THIS CONSTRUCTION STANDARD SHALL ONLY BE USED FOR OUTSIDE METER SETS.

E. METERS CAN BE INSTALLED EITHER TO THE RIGHT OR THE LEFT OF THE SERVICE RISER.

F. THE METER PIPING SHALL BE INSTALLED SO THAT THE TOP OF THE METERS IS NO HIGHER THAN 6 FEET ABOVE FINISH GRADE. THE PURGE SHALL ALSO BE NO LOWER THAN 6 INCHES FROM FINISH GRADE.

G. CONTRACTORS TO COMPLY WITH ADDITIONAL HEADER DIMENSIONS.

H. APPROPRIATE APARTMENT NUMBERS, STORE NUMBERS, ADDRESS OR NAME SHALL ENGRAVED OR STAMPED ON A PERMANENT BRASS OR ALUMINUM TAG AND ATTACHED TO THE METER OUTLET PIPING.

I. USE GALVANIZED PIPING FOR OUTSIDE METER SETS.

J. CUSTOMER PIPING WHICH IS NOT READY FOR SERVICE WHEN HEADER IS FABRICATED SHALL BE FITTED AT THE RISER WITH A LOCKWING VALVE, AND THE LINE PLUGGED.

K. REFER TO THE SERVICES SECTION FOR SERVICE INSTALLATION. REGULATORS SHALL BE SIZED PROPERLY.

L. SERVICE RISER, METER HEADER AND METER SHALL BE LOCATED TO PREVENT DAMAGE CAUSED BY VEHICLES OR MECHANICAL EQUIPMENT.

M. THE CONTRACTOR SHALL BE RESPONSIBLE FOR INSTALLATION OF ANY REQUIRED VENT PIPING. PIPE SIZE AND VENT TERMINATION LOCATION SHALL BE AGREED TO BY BEFORE STARTING WORK.

N. ALL BY-PASS VALVES SHALL BE LOCNAT. GRID CLOSED BY NAT. GRID.

O. SERVICE RISER SHALL NOT BE ENCASED IN CONCRETE, BLACKTOP OR ANY PAVEMENT MATERIALS.

P. UNLESS OTHERWISE SPECIFIED, ALL CUSTOMER OWNED PIPING MUST BE IN COMPLIANCE WITH NFPA-54 AND SPECIFICATIONS AND REQUIREMENTS FOR GAS INSTALLATIONS.

Q. THE GAS SERVICE LOCATION TAG SHALL BE INSTALLED BY NAT. GRID PER CUST- 5230.

R. ALL PIPING, FITTINGS, ETC. SHALL BE INSPECTED FOR DEFECTED AND THOROUGHLY CLEANED OF ALL FOREIGN MATTER BEFORE BEING INSTALLED.

S. PIPE STRAPS OR HANGERS SHALL BE USED FOR SUPPORT. THE PLACEMENT OF THE SUPPORTS DEPENDS ON THE CONFIGURATION OF THE METER SET AND CUSTOMER’S HOUSE LINE.

T. THE METER VALVE SHALL FACE FORWARD FROM THE WALL FOR EASY ACCESSIBILITY, WHENEVER POSSIBLE.

U. THE INSULATED FLANGE KIT, WHEN USED, SHALL BE INSTALLED ON THE SERVICE LINE VALVE BY NAT. GRID.

V. AT TIMES OF INSTALLATION ALL SERVICE LINES SHALL BE PLUMB AND LEVEL.

No.	**ITEM**	**NAT. GRID CODE No.**

BILL OF MATERIAL

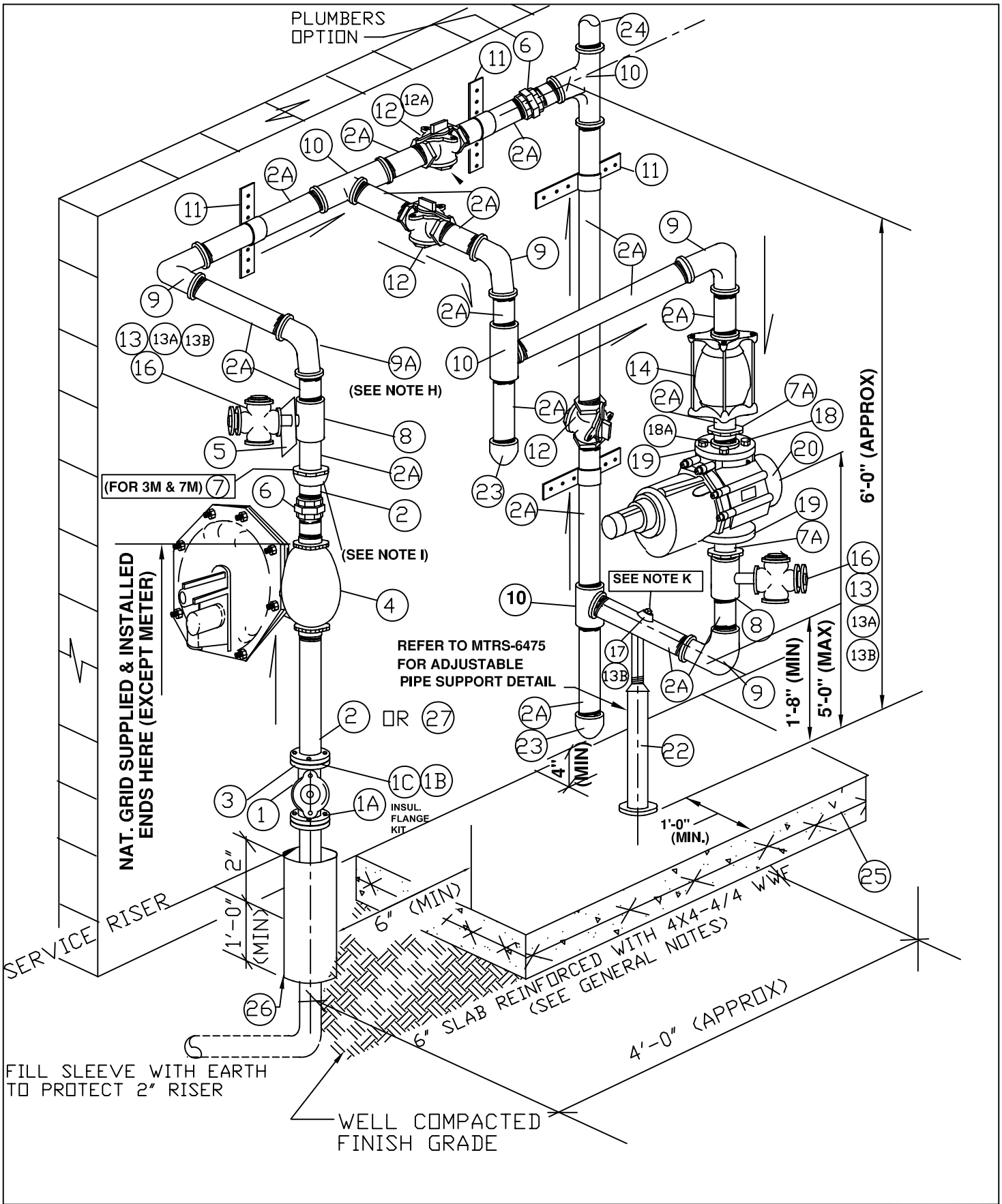

nationalgrid

LONG ISLAND

HP MAIN / LP, 1/2 PSIG & 1 PSIG METERING FOR 8C, 1.5M, 3M OR 7M VERTICAL-ROTARY GAS METER

REVISIONS: REDUCED PIPE SIZE TO 2" FOR 8C & 1.5M METER

DATE: 07/01/2003	EFFECTIVE DATE: 4/05/2006
DESIGN: JAL	STD. DWG. NO. **MTRS-6255**
DRAWN: HF	

NOTES

A. SEE GENERAL NOTES MTRS – 6545
B. ALL THREADED TYPE PIPE AND FITTINGS TO BE HOT DIPPED GALVANIZED
C. ALL FITTING SHALL BE MALLEABLE IRON CLASS 150, ANSI B 16.3
D. CINCH ANCHORS OR EQUIVALENT TO BE INSTALLED IN FLOOR FLANGES (ITEM 21) BY CUSTOMER.
E. FOR UNDERGROUND CUSTOMER'S HOUSE PIPING REFER TO DESIGN SECTION
F. NATIONAL GRID WILL SUPPLY AND INSTALL ITEMS 1 THRU 5 (EXCEPT 2A), 112A, 16,18A THRU 20 AND 26.
G. ITEM 4 AND 20 CAN BE ROTATED TO FIT FIELD CONDITIONS
H. THE CUSTOMER MAY AT HIS OPTION INSTALL A VERTICAL PRESSURE TAP AT ITEM 9A IF A HEEL TEE IS USED.
I. FOR LOADS UPTO 1500 CFH 2" PIPING CAN BE USED AFTER THE REGULATOR.
J. FOR 99 PSIG AND 124 PSIG INLETS, THE ACTARIS B34IMRV, FISHER S-302 AND FISHER S-203 REGULATOR MUST HAVE THEIR ORIFICES CHANGED TO ¼".
K. FOR T.C. RATE INSTALLATIONS AND FOR METERING > 1 PSIG, A ¾ THREADOLET IS NEEDED FOR A THERMOWELL. THIS MUST BE DRILLED OUT TO 7/8" DIAMETER. IF WELDING IS NOT FEASIBLE, USE A 2" X 2" THREADED TEE AND INSTALL A 2" X ¾" BUSHING FOR THE THERMOWELL.
L. FOR 14" W.C. AND 1 PSIG METERING, CONTACT METER OPERATIONS FOR PROPER METER WITH INDEX.

LEGEND:

X X SUPPLIED BY CUSTOMER * SEE FOR PROPER DESIGN SECTION REGULATOR SELECTING AND SIZING
\+ AS REQUIRED ** TO BE SUPPLIED BY NATIONAL GRID
SEE GENERAL NOTES OF MTRS – 6545

No.	ITEM		NAT. GRID CODE No.
27	2" THREADED NIPPLE X 2" 150# FALT FACE FLANGE	1	343005
26	SLEEVE – 4" PIPE – PLASTIC OR EQUIVALENT	1	NAT. GRID
25	SLAB REINF – 4X4 – 4/4 WIRE WELDED FABRIC	1	X X
24	PIPE – HOUSE LINE	+	X X
23	CAP – 2" - THREADED	2	X X
22	PIPE SUPPORT – 2 1/2" - ADJUSTABLE	1	NAT. GRID
21	NOT USED		
20	METER – LINE MOUNTED ROTARY – 8C OR 1.5M 125 – 2" INLET / OUTLET	1	**
19	GASKET RING - METER	2	317027
18A	BOLT – 5 /8" X 2 ASTM A 307 GR B	8	362027
18	FLANGE – 2" FF – COMPANION – ANSI CLASS 125 – THREADED OUTLET	2	X X
17	THREADOLET 2" X ¾" SEE NOTE K	1	X X
16	GAS SNAPLOCK	2	136506
14	COUPLING – 2" – COMPRESSION – DRESSER STYLE 38	1	X X
13B	PLUG – 3 /4" - THREADED	3	X X
13A	NIPPLE – 3 /4" X 3" - THREADED	2	X X
13	COCK – 3/4" - LOCKWING	2	X X
12A	LOCKING DEVICE	1	136503
12	VALVE – 2" - THREADED	3	X X
11	CHANNEL – 1 5/8" - UNISTRUT W / CLAMP	+	X X
10	TEE – 2" - THREADED	4	X X
9,9A	ELBOW – 2" – 90 DEGREE - THREADED	5	X X
8	TEE – 2" X 3 /4" X 2" - THREADED	2	X X
7,7A	ITEM DELETED		
6	UNION – 2"	2	X X
5	TAG – GAS SERVICE LOCATION	1	301728
4	REGULATOR - 2" FISHER S-203 OR REGULATOR - 2" ACTARIS B34IMRV OR REGULATOR – 2" FISHER S302/ACTARIS B34SR (1,100 CFH MAX)	1 1 1	357026 357025 357021
3	GASKET RING – 2"	1	317027
2A	PIPE – 2"	+	X X
2	PIPE- 2"	+	350059
1C	FLANGE – 2" – WELDED NECK	2	322156
1B	BOLTS – 5 /8" X 2 3 /4" A 307 - MACHINE	8	309303
1A	GASKET SET – 2" - INSTALLED	1	333017
1	VALVE – 2" FLANGED	1	382214

BILL OF MATERIAL – 8C & 1.5M METERS

NOTES

A. SEE GENERAL NOTES MTRS – 6545
B. ALL THREADED TYPE PIPE AND FITTINGS TO BE HOT DIPPED GALVANIZED
C. ALL FITTING SHALL BE MALLEABLE IRON CLASS 150, ANSI B 16.3
D. CINCH ANCHORS OR EQUIVALENT TO BE INSTALLED IN FLOOR FLANGES (ITEM 21) BY CUSTOMER.
E. FOR UNDERGROUND CUSTOMER'S HOUSE PIPING REFER TO DESIGN SECTION
F. NATIONAL GRID WILL SUPPLY AND INSTALL ITEMS 1 THRU 5 (EXCEPT 2A), 112A, 16,18A THRU 20 AND 26.
G. ITEM 4 AND 20 CAN BE ROTATED TO FIT FIELD CONDITIONS
H. THE CUSTOMER MAY AT HIS OPTION INSTALL A VERTICAL PRESSURE TAP AT ITEM 9A IF A HEEL TEE IS USED.
I. INCREASE PIPE SIZE TO 3" WITHIN 12" AFTER THE REGULATOR.
J. FOR 99 PSIG AND 124 PSIG INLETS, THE ACTARIS B34IMRV, FISHER S-302 AND FISHER S-203 REGULATOR MUST HAVE THEIR ORIFICES CHANGED TO ¼".
K. FOR T.C. RATE INSTALLATIONS AND FOR METERING > 1 PSIG, A ¾ THREADOLET IS NEEDED FOR A THERMOWELL. THIS MUST BE DRILLED OUT TO 7/8" DIAMETER. IF WELDING IS NOT FEASIBLE, USE A 3" X 2" THREADED TEE AND INSTALL A 2" X ¾" BUSHING FOR THE THERMOWELL.
L. FOR 14" W.C. AND 1 PSIG METERING, CONTACT METER OPERATIONS FOR PROPER METER WITH INDEX.

LEGEND:

X X SUPPLIED BY CUSTOMER * SEE FOR PROPER DESIGN SECTION REGULATOR SELECTING AND SIZING
\+ AS REQUIRED ** TO BE SUPPLIED BY NATIONAL GRID
SEE GENERAL NOTES OF MTRS – 6545

No.	ITEM		NAT. GRID CODE No.
27	2" THREADED NIPPLE X 2" 150# FLAT FACE FLANGE	1	343005
26	SLEEVE – 4" PIPE – PLASTIC OR EQUIVALENT	1	NAT. GRID
25	SLAB REINF – 4X4 – 4/4 WIRE WELDED FABRIC	1	X X
24	PIPE – HOUSE LINE	+	X X
23	CAP – 3" - THREADED	2	X X
22	PIPE SUPPORT – 2 1/2" - ADJUSTABLE	1	NAT. GRID
21	NOT USED		
20	METER – LINE MOUNTED ROTARY – 3M 125 – 2" INLET / OUTLET	1	**
19	GASKET RING - METER	2	317027
18A	BOLT – 5 /8" X 2 ASTM A 307 GR B	8	362027
18	FLANGE – 2" FF – COMPANION – ANSI CLASS 125 – THREADED OUTLET	2	X X
17	THREADOLET 3" X ¾" SEE NOTE K	1	X X
16	GAS SNAPLOCK	2	136506
14	COUPLING – 3" – COMPRESSION – DRESSER STYLE 38	1	X X
13B	PLUG – 3 /4" - THREADED	3	X X
13A	NIPPLE – 3 /4" X 3" - THREADED	2	X X
13	COCK – 3/4" - LOCKWING	2	X X
12A	LOCKING DEVICE	1	136503
12	VALVE – 3" - THREADED	3	X X
11	CHANNEL – 1 5/8" - UNISTRUT W / CLAMP	+	X X
10	TEE – 3" - THREADED	4	X X
9,9A	ELBOW – 3" – 90 DEGREE - THREADED	5	X X
8	TEE – 3" X 3 /4" X 3" - THREADED	2	X X
7,7A	REDUCER – 2" X 3" - THREADED	3	X X
6	UNION – 2"	2	X X
5	TAG – GAS SERVICE LOCATION	1	301728
4	REGULATOR - 2" FISHER S-203 OR REGULATOR - 2" ACTARIS B34IMRV	1 1	357026 357025
3	GASKET RING – 2"	1	317027
2A	PIPE – 3"	+	X X
2	PIPE- 2"	+	350059
1C	FLANGE – 2" – WELDED NECK	2	322156
1B	BOLTS – 5 /8" X 2 3 /4" A 307 - MACHINE	8	309303
1A	GASKET SET – 2" - INSTALLED	1	333017
1	VALVE – 2" FLANGED	1	382214

BILL OF MATERIAL – 3M METER

NOTES

A. SEE GENERAL NOTES MTRS – 6545
B. ALL THREADED TYPE PIPE FITTINGS TO BE HOT DIPPED GALVANIZED
C. ALL FITTINGS SHALL BE MALLEABLE IRON CLASS 150, ANSI B 16.3
D. CINCH ANCHORS OR EQUIVALENT TO BE INSTALLED IN FLOOR FLANGE (ITEM 21) BY CUSTOMER
E. FOR UNDERGROUND CUSTOMER'S HOUSE PIPING REFER TO DESIGN SECTION
F. NATIONAL GRID WILL SUPPLY AND INSTALL ITEMS 1 THRU 5 (EXCEPT 2A) 12A, 16, 18A THRU 20 AND 26.
G. ITEM 4 AND 20 CAN BE ROTATED TO FIT FIELD CONDITIONS
H. THE CUSTOMER MAY AT HIS OPTION INSTALL A VERTICAL PRESSURE TAP AT ITEM 9A IF HEEL TEE IS USED.
I. INCREASE PIPE SIZE TO 3" WITHIN 12" OF THE REGULATOR.
J. FOR 99 PSIG AND 124 PSIG INLETS, THE ACTARIS B34IMRV, FISHER S-302 AND FISHER S-203 REGULATORS MUST HAVE THEIR ORIFICES CHANGED TO 3/8".
K. FOR T.C. RATE INSTALLATIONS AND METERING PRESSURES > 1 PSIG, A ¾ THRED-O-LET IS NEEDED FOR A THERMOWELL. THIS MUST BE DRILLED OUT TO 7/8" DIAMETER.
AN ALTERNATE TO A THREADOLET IS A 3" X 2" THREADED TEE FOR 8C-3M INSTALLATIONS OR A 4" X 2" TEE FOR 7M INSTALLATIONS, THEN INSTALL A 2" X ¾" BUSHING INTO THE TEE FOR THE THERMOWELL.
L. FOR 14" W.C. AND 1 PSIG METERING, CONTACT METER OPERATIONS FOR PROPER METER WITH INDEX.

LEGEND:
X X SUPPLIED BY CUSTOMER ** TO BE SUPPLIED BY NATIONAL GRID + AS REQUIRED

27	2" THREADED NIPPLE X 2" 150# FLAT FACE FLANGE	1	343005
26	SLEEVE – 4" PIPE – PLASTIC OR EQUIVALENT	1	NAT. GRID
25	SLAB REINF – 4X 4 – 4/4 WIRE WELDED FABRIC	1	X X
24	PIPE – HOUSE LINE	+	X X
23	CAP –4" - THREADED	2	X X
22	PIPE SUPPORT – 3" – ADJUSTABLE	1	NAT. GRID *
21	NOT USED		
20	METER – LINE MOUNTED ROTARY – 7M 125 –3" INLET / OUTLET	1	**
19	GASKET RING - METER	2	317028
18A	BOLT – 5/8" X 2" ASTM A 307 GR B	8	362027
18	FLANGE – 3" FF – COMPANION – ANSI CLASS 125 – THREADED OUTLET	2	X X
17	THREADOLET 4" X ¾" SEE NOTE K	1	X X
16	GAS SNAPLOCK	2	136506
15	NOT USED		
14	COUPLING – 4" – COMPRESSION – DRESSER STYLE 38	1	X X
13B	PLUG – 3/4" - THREADED	3	X X
13A	NIPPLE – 3 /4" X 3" - THREADED	2	X X
13	COCK – 3/4" - LOCKWING	2	X X
12A	LOCKING DEVICE	1	136503
12	VALVE – 4" - THREADED	3	X X
11	CHANNEL – 1 5/8" – UNISTRUT W / CLAMP	+	X X
10	TEE – 4" - THREADED	4	X X
9,9A	ELBOW – 4" – 90 DEGREE - THREADED	5	X X
8	TEE – 4"X 3 / 4" X 4" - THREADED	2	X X
7A	REDUCER – 3" X 4" - THREADED	2	X X
7	REDUCER – 2" X 4" - THREADED	1	X X
6	UNION – 2"	2	X X
5	TAG – GAS SERVICE LOCATION	1	301728
4	REGULATOR - 2" FISHER S-203 THREADED OR - 2" ACTARIS B34IMRV THREADED	1 1	357026 357025
3	GASKET RING - 2"	1	317027
2A	PIPE – 4"	+	X X
2	PIPE – 2"	+	350059
1C	FLANGE – 2" – WELDED NECK	2	322156
1B	BOLTS – 5 /8" X 2 3/4", A 307 - MACHINE	8	309303
1A	GASKET SET – 2" – FLANGED - INSULATED	1	333017
1	VALVE – 2" - FLANGED	1	382214
No.	**ITEM – 7M**	**NAT. GRID CODE No.**	

BILL OF MATERIAL

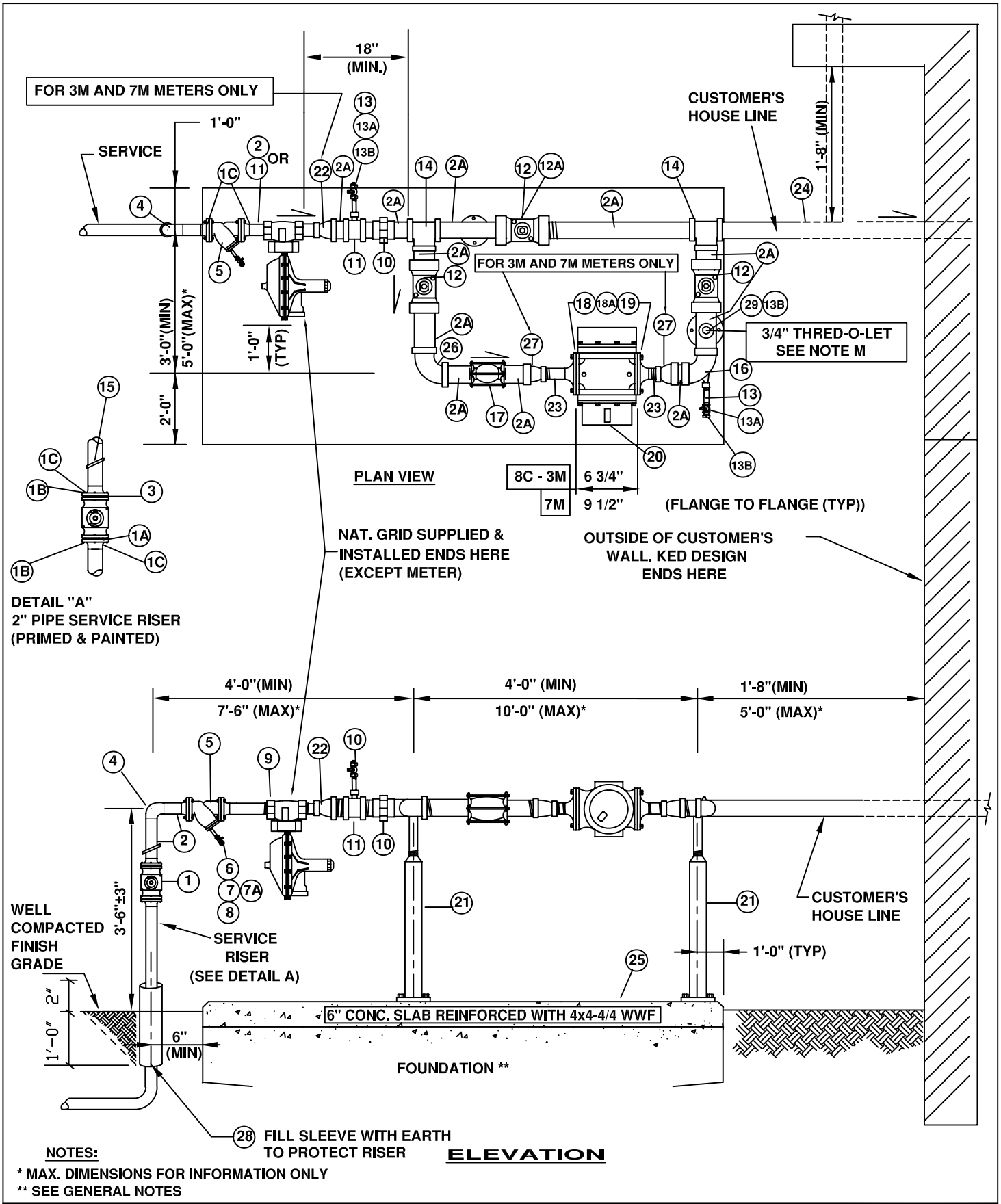

NOTES:

* MAX. DIMENSIONS FOR INFORMATION ONLY

** SEE GENERAL NOTES

nationalgrid

LONG ISLAND

HP MAIN / LP, 14" OR 1 PSIG METERING FOR 8C, 1.5M, 3M OR 7M HORIZONTAL - ROTARY GAS METER OUTSIDE LOCATIONS

REVISIONS: REDUCED PIPING TO 2" FOR 8C AND 1.5M METERS

DATE: 07/01/2003	EFFECTIVE DATE: 04/05/2006
DESIGN: P.GUGLIOTTA	STD. DWG.
DRAWN: P.GUGLIOTTA	NO. **MTRS-6265**

NOTES

A. SEE GENERAL NOTES MTRS-6545
B. ALL SCREW TYPE PIPE FITTINGS TO BE HOT DIPPED GALVANIZED
C. ALL FITTINGS SHALL BE MALLEABLE IRON CLASS 150, ANSI B 16.3
D. ALL EXPOSED UNCOATED PIPING SHALL BE COATED IN ACCORDANCE WITH CORR-6135
E. CINCH ANCHORS TO BE INSTALLED IN FLOOR FLANGES (ITEM 21) BY CUSTOMER
F. FOR UNDERGROUND CUSTOMER'S HOUSE PIPING REFER TO DESIGN SECTION
G. FOR VEHICULAR DAMAGE PROTECTION SEE MTRS – 6060
H. A METER SHALL NEVER BE INSTALLED LOWER THAN EITHER SIDE OF PIPE RUNS
I. NATIONAL GRID WILL SUPPLY AND INSTALL ITEMS EXCEPT WHERE NOTED.
J. THE CAPACITY OF THE S-302 WITH THE 7/32"X1/4" ORIFICE ON THE 60 PSIG SYSTEM IS 1500 CFH. ON THE 99/124 PSIG SYSTEM, A 5/32" X 3/16" ORIFICE IS NEEDED AND THE CAPACITY IS 2,900 CFH AND CAN BE USED FOR 3M INSTALLATIONS. FOR 7M INSTALLATIONS USE 2" ACTARIS B34IMRV OR FISHER S-203.
K. THE ACTARIS B-34IMRV, THE FISHER S-203 AND THE FISHER S-302 REGULATORS HAVE A MAXIMUM INLET PRESSURE OF 60 PSIG. FOR 99 PSIG AND 124 PSIG SYSTEMS, A 3/8" ORIFICE MUST BE INSTALLED.
L. FOR 14" AND 1 PSIG METERING, CONTACT METER OPERATIONS TO ORDER A 14" OR 1 PSIG INDEX AND THE METER.
M. FOR T.C. RATE INSTALLATIONS AND METERING PRESSURES > 1 PSIG, A ¾ THRED-O-LET IS NEEDED FOR A THERMOWELL. THIS MUST BE DRILLED OUT TO 7/8" DIAMETER. AN ALTERNATE TO A THREADOLET IS A 2" X ¾" THREADED TEE FOR THE 8C AND 1.5M OR A 3" X 2" THREADED TEE FOR 3M INSTALLATIONS OR A 4" X 2" TEE FOR 7M INSTALLATIONS, THEN INSTALL A 2" X ¾" BUSHING INTO THE TEE FOR THE THERMOWELL.

LEGEND
** SUPPLIED BY CUSTOMER
XX TO BE SUPPLIED BY METER OPERATIONS DEPARTMENT
\+ AS REQUIRED

29	THREADOLET ¾" - SEE NOTE M	1	**	**	**
28	SLEEVE – 4" PIPE PLASTIC OR EQUIVALENT	1	NAT. GRID	NAT. GRID	NAT. GRID
27	REDUCER **(NOT NEEDED FOR 8C AND 1.5M)**. FOR 3M USE 3" X 2" , FOR 7M USE 4" X 3"	2	**	**	**
26	ELBOW – 90 3" (8C, 1.5M OR 3M) - OR 4" (7M) -	1	**	**	**
25	SLAB REINF 4 X4 – 4/4 WWF	1	**	**	**
24	PIPE – HOUSE LINE	+	**	**	**
23	PIPE 2" FOR 8C, 1.5M OR 3M, 3" FOR 7M	2	**	**	**
22	REDUCER **(NOT NEEDED FOR 8C AND 1.5M)** 3" X 2" FOR 3M, 4" X 2" FOR 7M	1	**	**	**
21	SADDLE – PIPE STANCHION – ADJUSTABLE	2	**	**	**
20	METER LINE MOUNTED ROTARY 8C, 1.5M, 3M OR 7M	1	XX	XX	XX
19	GASKET RING - METER	2	317027	317027	317028
18A	BOLT, 5/8 – 11 X 2 ASTM A 307 GR B	8	362027	362027	362027
18	FLANGE – COMPANION , ANSI CLASS 125 (2" FF FOR 8C, 1.5M OR 3M) OR (3" FF FOR 7M)	2	**	**	**
17	COUPLING – COMPRESSION DRESSER STYLE 38 (2" FOR 8C & 1.5M, 3" FOR 3M, 4" FOR 7M)	1	**	**	**
16	HEEL TEE (2"X3/4"X2" FOR 8C & 1.5M, 3"X3/4"X3" FOR 3M OR (4" X 3/4" X 4" FOR 7M)	1	**	**	**
15	TAG- GAS SERVICE LOCATION	1	301728	301728	301728
14	TEE (2" FOR 8C & 1.5M, 3" FOR 3M OR 4" FOR 7M)	2	**	**	**
13B	PLUG, SOLID 3/4" NPT	3	**	**	**
13A	COCK, LOCKWING 3/4"	2	**	**	**
13	NIPPLE, 3/4" X 3" LONG	2	**	**	**
12A	LOCKING DEVICE	1	NAT. GRID	NAT. GRID	NAT. GRID
12	VALVE – (2" FOR 8C & 1.5M, 3" FOR 3M OR 4" FOR 7M)	3	**	**	**
11	TEE (8C, 1.5M) 2"X2"X3/4", (3M) 3" X 2" OR (7M) - 4" X 4" X 2" USE 2" X ¾" BUSHING	1	**	**	**
10	UNION 2" FOR 8C AND 1.5M, 3" FOR 3M OR 4" FOR 7M	1	**	**	**
9	2" FISHER S203 RELIEF / MONITOR REGULATOR SEE NOTE K 2" ACTARIS B34IMRV SEE NOTE K 2" FISHER S302 RELIEF OR B34SR / MONITOR REGULATOR (8C, 1.5M OR 3M ONLY) SEE NOTE J & K	1 1 1	357026 357025 357021	357026 357025 357021	357026 357025 N/A
8	PLUG, SOLID 3/8" NPT	1	352003	352003	352003
7A	GAS SNAP LOCK	1	136506	136506	136506
7	COCK, LOCKWINMG 3/8"	1	316033	316033	316033
6	NIPPLE, 3/8" X 3" LONG	1	343113	343113	343113
5	STRAINER – CAST IRON, FLANGED END "Y" 100 MESH SCREEN W / BOLTS	1	301028	301028	301028
4	ELBOW – 90 – 2"	1	320232	320232	320232
3	GASKET – RING – 2"	3	317027	317027	317027
2A	PIPE – (2" FOR 8C & 1.5M, 3" FOR 3M OR 4" FOR 7M)	+	**	**	**
2	PIPE – 2"	+	350059	350059	350059
1C	FLANGE 2" WELDED NECK	4	322156	322156	322156
1B	BOLTS 5/ 8 X 2 3/4 A 307	8	309303	309303	309303
1A	GASKET FLANGED INSULATED, 2"	1	333017	333017	333017
1	VALVE – FLANGE 2"	1	382214	382214	382214
		QTY	8C OR 1.5M	3M	7M
No.	**ITEM**			**NAT. GRID CODE No.**	

BILL OF MATERIAL

CLASS 400 C.F.H. WITH BYPASS

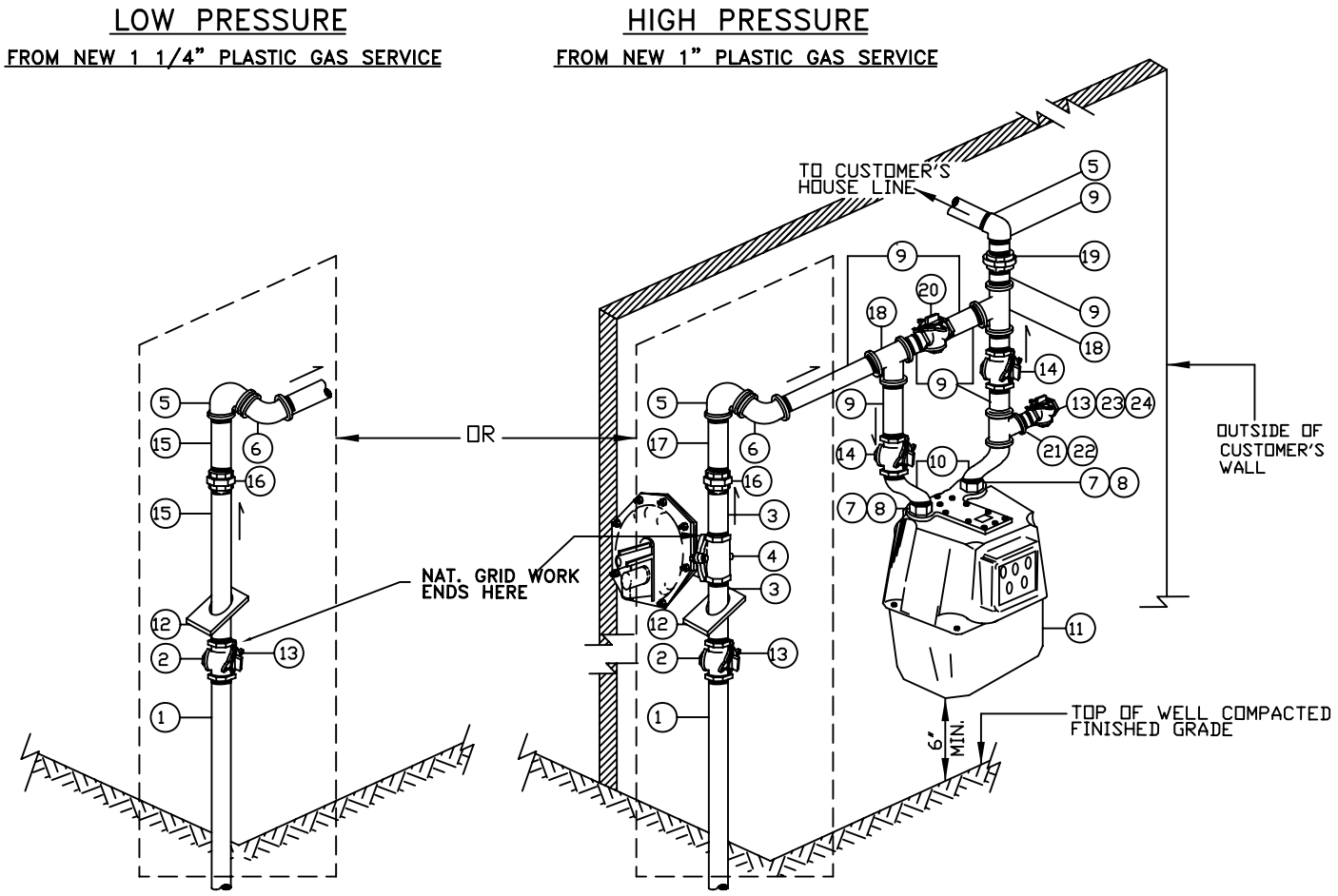

nationalgrid

LONG ISLAND

OUTDOOR GAS METER
CLASS 250 & 400 C.F.H. WITH BYPASS

REVISIONS: ADDED 250 METER WITH BYPASS
NOTE: MTRS 6140 & MTRS 6142
COVER 250/400 METERS WITHOUT BYPASS

DATE: 07/01/2003	EFFECTIVE DATE: 11/10/2004
DESIGN: JAL	STD. DWG. NO. **MTRS-6335**
DRAWN: MLoP	

NOTES

A. THIS CONSTRUCTION STANDARD SHALL BE USED WHEN AN OUTDOOR METER SET IS SPECIFIED ON A WORK ORDER. METER SETS SHALL BE DESIGNED IN ACCORDANCE WITH THE CUSTOMER'S LOAD, SERVICE LENGTH AND SIZE AS OUTLINED IN DESIGN SECTION.

B. A 3/4 INCH OR 1 1/4 INCH OUTLET RISER IS USED FOR THE METERS SHOWN.

C. FOR SERVICE INSTALLATION REQUIREMENTS, REFER TO THE SERVICES SECTION STANDARDS. THE RISER SHALL BE LOCATED A MINIMUM OF 12 INCHES FROM THE OUTSIDE BUILDING FOUNDATION WALL.

D. ALL EXPOSED PIPING AND THREADED FITTINGS SHALL BE GALVANIZED.

E. AFTER PURGING THE SERVICE THE AND BEFORE INSTALLING THE METER. THE METER VALVE ON THE RISER AND THE BYPASS IF USED, SHALL BE CLOSED AND LOCKED WITH A GAS SNAP LOCK DEVICE.

F. MAINTAIN 1/ 2 INCH MINIMUM CLEARANCE BETWEEN THE REGULATOR AND METER CASE OR ANY OTHER FOREIGN STRUCTURE. SWING REGULATOR, IF NECESSARY TO OBTAIN CLEARANCE.

G. SERVICE RISER, METER HEADER AND METER SHALL BE LOCATED TO PREVENT DAMAGE BY VEHICLES AND MECHANICAL EQUIPMENT. WHERE A PROTECTED LOCATION IS NOT AVAILABLE, ADD ADDITIONAL PROTECTION BY USE OF CONCRETE FILLED STEEL POSTS. POST SHALL BE FURNISHED AND INSTALLED BY CONTRACTOR, PER NAT. GRID STANDARD MTRS-6060.

H. THE METER AND ASSOCIATED PIPING SHALL BE PLUMB AND LEVEL FROM BOTH THE FRONT AND SIDE AS SHOWN IN THE DRAWINGS BELOW.

I. A STEEL PROTECTIVE SLEEVE SHALL BE USED AS A CASING FOR THE SERVICE PIPE WHEN INSTALLING THE SERVICE ABOVE GROUND THROUGH CONCRETE AND BLOCK WALLS. REFER TO SERV-6205 FOR LOCATIONS OF BUILDING ENTRY POINTS.

J. UNLESS OTHERWISE SPECIFIED, ALL PIPING SHALL BE IN COMPLIANCE WITH N.F.P.A.-54 AND NATIONAL GRID SPECIFICATIONS AND REQUIREMENTS FOR GAS INSTALLATIONS.

A/R AS REQUIRED
N/R NOT REQUIRED
* SUPPLIED BY NAT. GRID
* * SUPPLIED AND INSTALLED BY CUSTOMER

CLASS 400 CFH **WITH** BYPASS		HIGH PRESSURE		LOW PRESSURE	
		QTY.	ITEM ID	QTY.	ITEM ID
24	PLUG ¾" STEEL SOLID	1	**	1	**
23	VALVE ¾" LOCKWING, GALVANIZED	1	**	1	**
22	NIPPLE ¾" X 2" LONG, SCH. 40, GALVANIZED	1	**	1	**
21	TEE 1-1/4" X ¾", THREADED, GALVANIZED	1	**	1	**
20	METER VALVE - LOCKWING	1	* *	1	* *
19	UNION – 1 1/4" – NON- INSULATED	1	* *	1	* *
18	TEE – 1 1/4"	2	* *	2	* *
17	PIPE – 1 1/4" – STEEL – GALV.	A / R	* *	A / R	* *
16	UNION – 1 1/4" - INSULATING	1	380105**	1	380105**
15	NIPPLE – 1 1/4" X 12"	-	N / R	2	343160**
14	VALVE - METER - 1 1/ 4"	2	* *	2	* *
13	GAS SNAP LOCK	1	136506*	1	136506*
12	TAG – GAS SERVICE LOCATION	1	301728*	1	301728*
11	METER – TEMPERATURE COMPENSATED	1	*	1	*
10	SWIVEL – METER – 1 1/4"	2	366007*	2	366007*
9	NIPPLE – 1 1/4" X LENGTH AS REQUIRED	7	* *	7	* *
8	SWIVEL WASHER - RUBBER	2	366041*	2	366041*
7	NUT – METER – 45 LIGHT	2	345011*	2	345011*
6	ELBOW – 1 1/4" - STREET	1	* *	1	* *
5	ELBOW – 1 1/4" - SCREW	2	* *	2	* *
4	REGULATOR – 1 1/4" FOR 60 PSIG SYSTEM MAXIMUM 3/8" ORIFICE REGULATOR – 1 1/4" FOR 99 PSIG AND 124 PSIG SYSTEMS ¼" ORIFICE	1	357519* 357046*	-	N / R
3	NIPPLE – 1 1/4" X 4"	2	343155**	-	N / R
2	METER VALVE- 1 1/4" - LOCKING	1	315013*	1	315013*
1	RISER - 1" CTS X 1- 1 /4" OUTLET RISER - 1-1/4" IPS X 1-1/4" OUTLET	1 -	350013* -	- 1	- 350188*
No.	**ITEM**	**NAT. GRID CODE No.**			

BILL OF MATERIAL

CLASS 250 C.F.H. WITH BYPASS

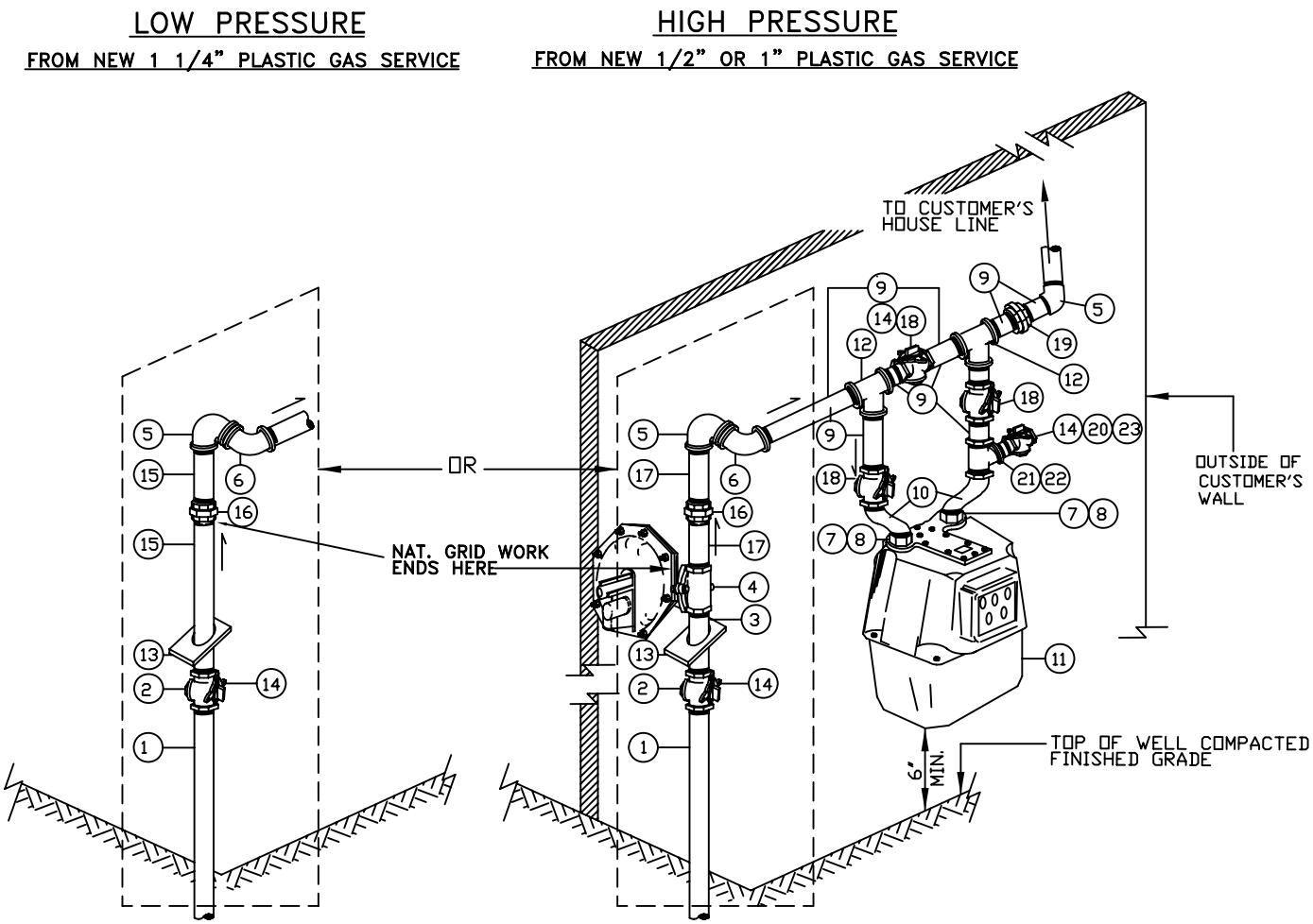

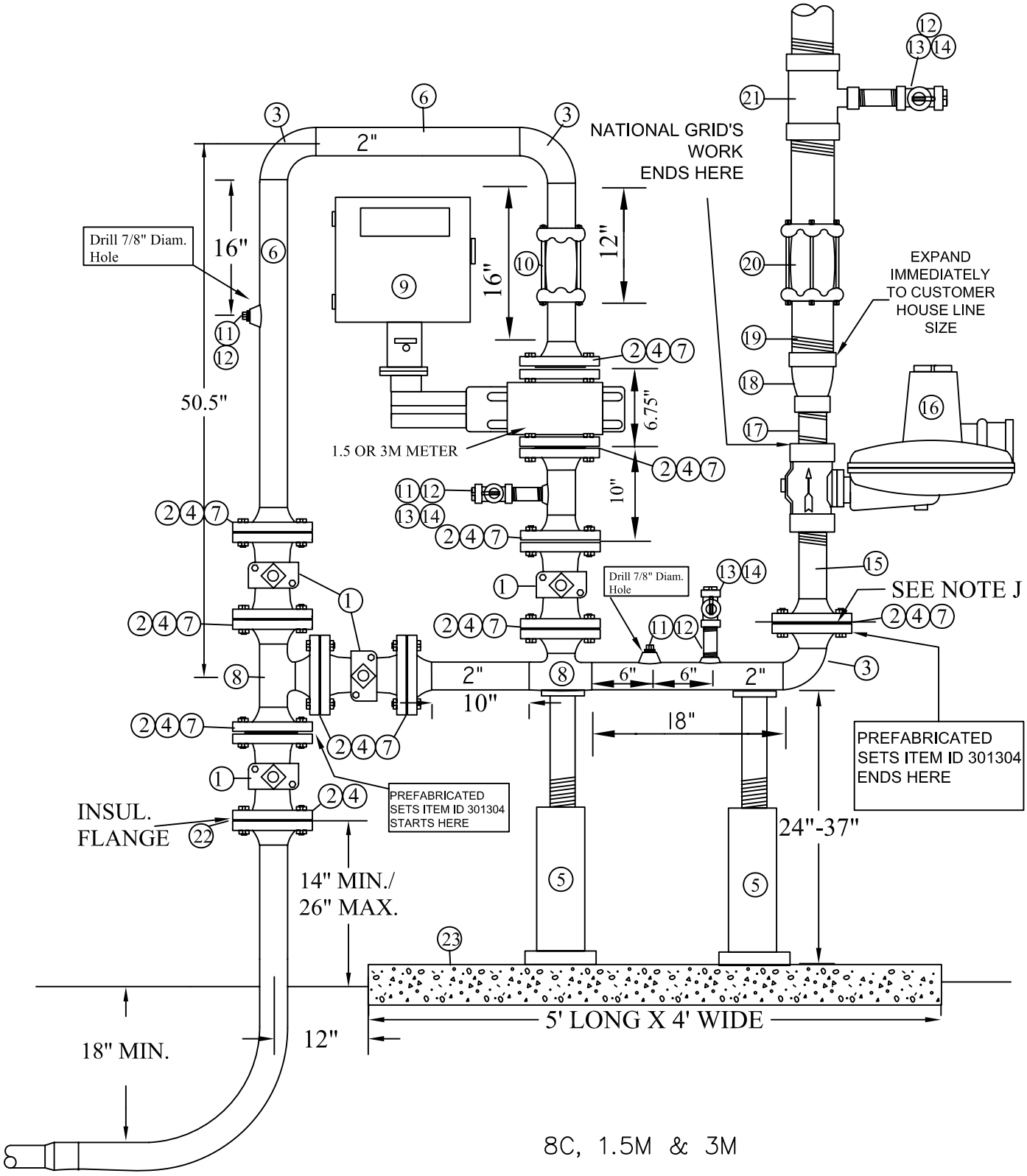

nationalgrid

LI

8C, 1.5, 3M & 7M HIGH PRESSURE ROTARY METER, VERTICAL POSITION WITH SINGLE REGULATOR

REVISIONS: COMBINED 8C, 1.5M, 3M AND 7M STANDARD MTRS-6405, MTRS-6425, MTRS-6435, MTRS-6445

DATE: 07/01/2003	EFFECTIVE DATE: 07/23/2004
DESIGN: PAUL GUGLIOTTA	STD. DWG. NO. MTRS-6385
DRAWN: PAUL GUGLIOTTA	

INSTALLATION NOTES

A. FOR 99 AND 124 PSIG SERVICES, THE ACTARIS B-34 IMRV REGULATOR OR THE FISHER S-203 AND S-302 REGULATOR MUST HAVE THE ORIFICE CHANGED TO 3/8". THE ACTARIS B34IMRV AND FISHER S-302 AND S-203 REGULATOR HAVE INTERNAL MONITORS WHICH SERVE AS OVER PRESSURE PROTECTION. ALL OTHER REGULATORS (SUCH AS FISHER S-201 AND 133 SERIES) MUST USE SEPARATE RELIEF VALVES FOR OVER PROTECTION. FISHER 133 AND S-203P REQUIRE DOWNSTREAM CONTROL LINESS. FOR THESE AND OTHER REMOTE MONITORING REGULATORS, INSTALL ¾" STEEL CONTROL LINE 10 PIPE DIAMETERS OF CUSTOMER'S HOUSE LINE (10 PIPE DIAMETER STARTS AFTER THE REDUCER - ITEM 18). MAXIMUM CAPACITY OF A FISHER S-302 IS 1500 CFH ON THE 60 SYSTEM.

B. GALVANIZED PIPE AND FITTINGS ARE THE PREFERRED MATERIALS OF CHOICE. BLACK PIPE, PRIMED AND PAINTED IS ALSO ACCEPTABLE.

C. WHERE VEHICLE TRAFFIC IS A CONCERN, PROTECTION POST ARE REQUIRED. REFER TO APPROVED NATIONAL GRID PROTECTION POST STANDARDS.

D. DO NOT WELD METER IN PLACE. USE A SPOOL PIECE.

E. ALL WELDING MUST CONFORM TO API-1104 PROCEDURES. ALL PIPING SHALL BE TESTED AT 1.5 MAOP OF INLET SERVICE PRESSURE FOR 30 MINUTES.

F. PREFABRICATED METER SETS COME WITH 2" X 6-3/4" LONG SPOOL PIECE IN PLACE OF METER.

G. 2" STRAINERS (ITEM ID 301028) AND FILTERS (ITEM ID 321025) CAN BE USED TO PROTECT EQUIPMENT FROM IN LINE DEBRIS. FOR PREFABRICATED SETS USE A FLANGED ELBOW (ITEM ID 320205) AND ROTATE FLANGED TEE AFTER INLET VALVE FOR STRAINER/FILTER INSTALLATION. SEE FIGURE 2 ON PAGE 9.

H. FOR PREFABRICATED SETS THAT REQUIRE DUAL RATES, INSTALL FLANGED TEE ON THE RISER VALVE AND THEN ROTATE FLANGED TEE ON THE PREFABRICATED SET FOR THE SECOND METER HEADER. SEE FIG 1 ON PAGE 9.

I. ELEVATED PRESSURE SHALL BE ONLY USED IF CUSTOMER'S EQUIPMENT REQUIRES IT. IT WILL NOT BE APPROVED TO DOWNSIZE HOUSE LINE.

J. THIS FLANGE SET IS ONLY FOR PREFABRIACTED METER HEADERS. IF THIS HEADER IS BEING BUILT NEW, THESE TWO FLANGES ARE NOT NEEDED.

BILL OF MATERIAL

ITEM	DESCRIPTION	ITEM I.D	QTY	MATERIAL NOTES
1	VALVE – 2" PLUG NODSTROM FIG 143	382214	4	FLANGED ENDS
2	FLANGE 2" WELD NECK FLAT FACE	322156	11	PER ASTM A-1O5 GR. B OR A-350 LF-2
3	ELBOW 2" WELD END 90 DEG. LONG RADIUS	320232	3	STD. WALL PER A-234 WPB
4	BOLTS MACHINE – 5/8" X 2-3/4" W/2H HEX NUT	309303	44	
5	PIPE SUPPORTS SADDLE – (TOP SECTION ONLY)	308049	2	INCLUDED IN PREFABRICATED SET
	PIPE SUPPORT BASE 20"-25" HEIGHT (BOTTOM SECT)	308041	2	SEE MTRS-6475 FOR PIPE SUPPORTS
	PIPE SUPPORT BASE 26"-31" HEIGHT (BOTTOM SECT)	308052	2	CHOOSE THE BASE WHICH WILL DETERMINE
	PIPE SUPPORT BASE 32"-41" HEIGHT (BOTTOM SECT)	308051	2	THE OVERALL LENGTH OF THE SUPPORT (FROM GROUND TO BOTTOM OF PIPE)
6	PIPE 2" STD. WALL (SCH. 40)	350059	15'	PER A-106 GR. B
7	GASKET 2" FULL FACE FOR 150# FF FLANGE	317027	10	KLINGER NITRILE TYPE C-4401
8	TEE 2", WELD END STD. WALL PER A-234 WPB	371196	2	ALT. IN 1 LOCATION, USE FLANGED TEE 371139
9	METER 8C, 1.5M OR 3M TEMPERATURE CORRECTED	+	1	
10	COUPLING 2" LOCK TYPE	316383	1	
11	THRED-O-LET ¾"X 2"PIPE	372000	4	PER A-105 GRADE B
12	PLUG ¾" SOLID STEEL	352005	4	3 BY NATIONAL GRID/1 BY CUSTOMER
13	NIPPLE ¾" X 3" LONG, GALVANIZED	343134	3	2 BY NATIONAL GRID/1 BY CUSTOMER
14	VALVE ¾" LOCKWING, GALVANIZED TAMPER PROOF	315006	3	2 BY NGG/1 BY CUST. – AY McDONALD 525B
15	THREADED 2" NIPPLE X 2" FLAT FACE 150# FLANGE	343005	1	ALT USE ITEM 2 AND 6 AND THREAD ONE END
16	REGULATOR 2" ACTARIS B34IMRV/FISHER S-203	357025	1	**SEE NOTE A**
17	NIPPLE 2" X 4" LONG GALVANIZED STD. WT	BY CUST.	1	
18	REDUCER 2" X CUST. HOUSE LINE SIZE GLAV.	BY CUST.	1	
19	PIPE – CUST. HOUSE LINE SIZE. GALVANIZED	BY CUST	A/R	
20	COUPLING CUSTOMER HOUSE LINE SIZE LOCK TYPE	BY CUST	1	
21	TEE CUST. HOUSE LINE SIZE X ¾", THREADED, GALV.	BY CUST.	1	
22	INSULATING FLANGE KIT	333017	1	
23	METER PAD 5' LONG X 4' WIDE X 6" THICK	BY CUST.	1	

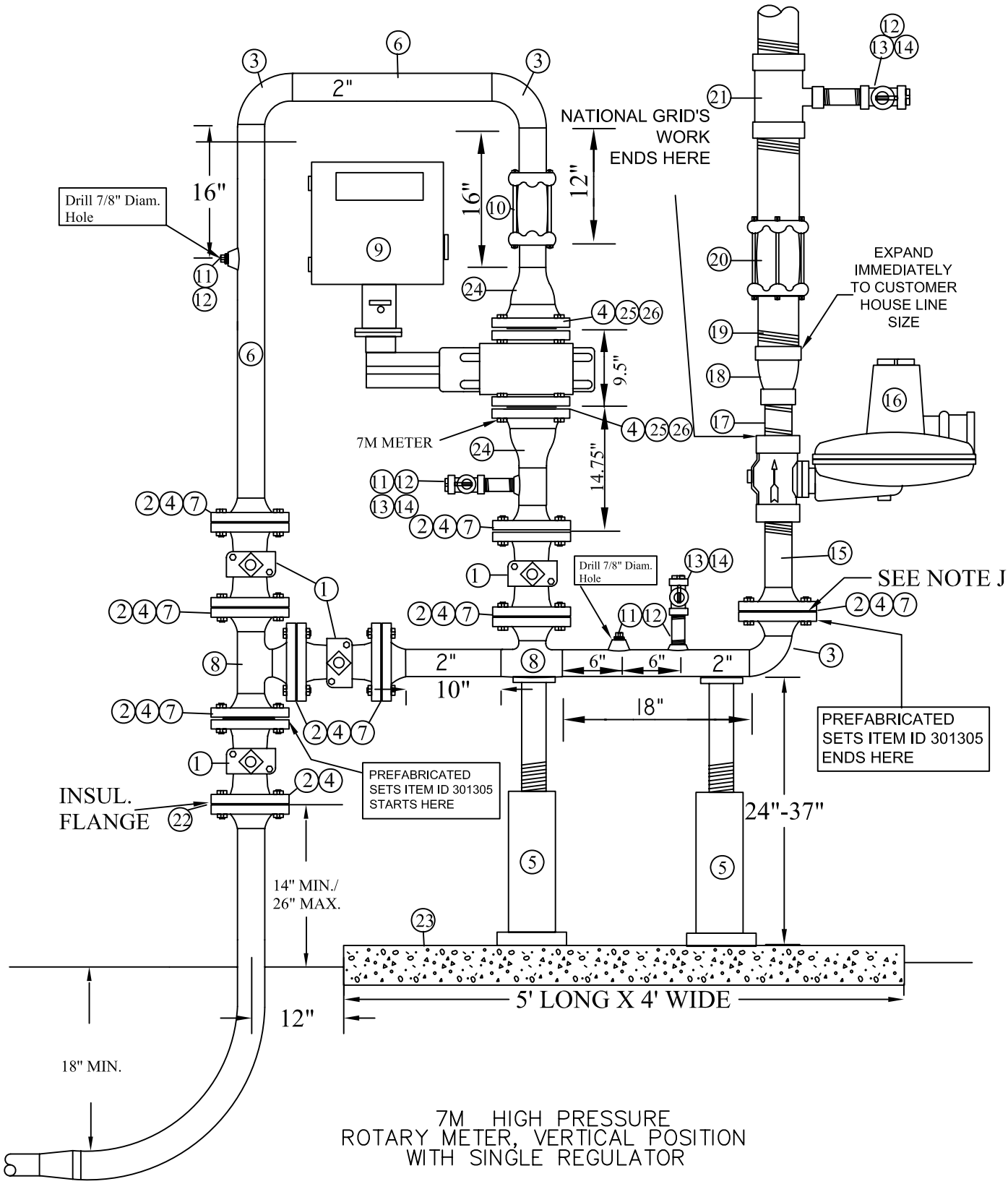

7M HIGH PRESSURE
ROTARY METER, VERTICAL POSITION
WITH SINGLE REGULATOR

INSTALLATION NOTES

A. FOR 99 AND 124 PSIG SERVICES, THE ACTARIS B-34 IMRV REGULATOR OR THE FISHER S-203 AND S-302 REGULATOR MUST HAVE THE ORIFICE CHANGED TO 3/8". THE ACTARIS B34IMRV AND FISHER S-302 AND S-203 REGULATOR HAVE INTERNAL MONITORS WHICH SERVE AS OVER PRESSURE PROTECTION. ALL OTHER REGULATORS (SUCH AS FISHER S-201 AND 133 SERIES) MUST USE SEPARATE RELIEF VALVES FOR OVER PROTECTION. FISHER 133 AND S-203P REQUIRE DOWNSTREAM CONTROLS. FOR THESE AND OTHER REMOTE MONITORING REGULATORS, INSTALL ¾" STEEL CONTROL LINE 10 PIPE DIAMETERS OF CUSTOMER'S HOUSE LINE (10 PIPE DIAMETER STARTS AFTER THE REDUCER - ITEM 18).

B. GALVANIZED PIPE AND FITTINGS ARE THE PREFERRED MATERIALS OF CHOICE. BLACK PIPE, PRIMED AND PAINTED IS ALSO ACCEPTABLE.

C. WHERE VEHICLE TRAFFIC IS A CONCERN, PROTECTION POST ARE REQUIRED. REFER TO APPROVED NATIONAL GRID PROTECTION POST STANDARDS.

D. DO NOT WELD METER IN PLACE. USE A SPOOL PIECE.

E. ALL WELDING MUST CONFORM TO API-1104 PROCEDURES. ALL PIPING SHALL BE TESTED AT 1.5 MAOP OF INLET SERVICE PRESSURE FOR 30 MINUTES.

F. PREFABRICATED METER SETS COME WITH 2" X 6-3/4" LONG SPOOL PIECE IN PLACE OF METER.

G. 2" STRAINERS (ITEM ID 301028) AND FILTERS (ITEM ID 321025) CAN BE USED TO PROTECT EQUIPMENT FROM IN LINE DEBRIS. FOR PREFABRICATED SETS USE A FLANGED ELBOW (ITEM ID 320205) AND ROTATE FLANGED TEE AFTER INLET VALVE FOR STRAINER/FILTER INSTALLATION. SEE FIGURE 2 ON PAGE 9.

H. FOR PREFABRICATED SETS THAT REQUIRE DUAL RATES, INSTALL FLANGED TEE ON THE RISER VALVE AND THEN ROTATE FLANGED TEE ON THE PREFABRICATED SET FOR THE SECOND METER HEADER. SEE FIG 1 ON PAGE 9.

I. ELEVATED PRESSURE SHALL BE ONLY USED IF CUSTOMER'S EQUIPMENT REQUIRES IT. IT WILL NOT BE APPROVED TO DOWNSIZE HOUSE LINE.

J. THIS FLANGE SET IS ONLY FOR PREFABRIACTED METER HEADERS. IF THIS HEADER IS BEING BUILT NEW, THESE TWO FLANGES ARE NOT NEEDED.

BILL OF MATERIAL

ITEM	DESCRIPTION	ITEM I.D	QTY	MATERIAL NOTES
1	VALVE – 2" PLUG NODSTROM FIG 143	382214	4	FLANGED ENDS
2	FLANGE 2" WELD NECK FLAT FACE	322156	11	PER ASTM A-1O5 GR. B OR A-350 LF-2
3	ELBOW 2" WELD END 90 DEG. LONG RADIUS	320232	3	STD. WALL PER A-234 WPB
4	BOLTS MACHINE – 5/8" X 2-3/4" W/2H HEX NUT	309303	44	
5	PIPE SUPPORTS SADDLE – (TOP SECTION ONLY)	308049	2	INCLUDED IN PREFABRICATED SET
	PIPE SUPPORT BASE 20"-25" HEIGHT (BOTTOM SECT)	308041	2	SEE MTRS-6475 FOR PIPE SUPPORTS
	PIPE SUPPORT BASE 26"-31" HEIGHT (BOTTOM SECT)	308052	2	CHOOSE THE BASE WHICH WILL DETERMINE
	PIPE SUPPORT BASE 32"-41" HEIGHT (BOTTOM SECT)	308051	2	THE OVERALL LENGTH OF THE SUPPORT (FROM GROUND TO BOTTOM OF PIPE)
6	PIPE 2" STD. WALL (SCH. 40)	350059	15'	PER A-106 GR. B
7	GASKET 2" FULL FACE FOR 150# FF FLANGE	317027	10	KLINGER NITRILE TYPE C-4401
8	TEE 2", WELD END STD. WALL PER A-234 WPB	371196	2	ALT. IN 1 LOCATION, USE FLANGED TEE 371139
9	METER 7M TEMPERATURE CORRECTED	+	1	
10	COUPLING 2" LOCK TYPE	316383	1	
11	THRED-O-LET ¾"X 2"PIPE	372000	4	PER A-105 GRADE B
12	PLUG ¾" SOLID STEEL	352005	4	3 BY NATIONAL GRID/1 BY CUSTOMER
13	NIPPLE ¾" X 3" LONG, GALVANIZED	343134	3	2 BY NATIONAL GRID/1 BY CUSTOMER
14	VALVE ¾" LOCKWING, GALVANIZED TAMPER PROOF	315006	3	2 BYNGG/1 BY CUST. – AY McDONALD 525B
15	THREADED 2" NIPPLE X 2" FLAT FACE 150# FLANGE	343005	1	ALT USE ITEM 2 AND 6 AND THREAD ONE END
16	REGULATOR 2" (B34IMRV/FISHER S203) **SEE NOTE A**	357025	1	
17	NIPPLE 2" X 4" LONG GALVANIZED STD. WT	BY CUST.	1	
18	REDUCER 2" X CUST. HOUSE LINE SIZE GLAV.	BY CUST.	1	
19	PIPE – CUST. HOUSE LINE SIZE. GALVANIZED	BY CUST.	1	
20	COUPLING CUSTOMER HOUSE LINE SIZE LOCK TYPE	BY CUST.	1	
21	TEE CUST. HOUSE LINE SIZE X ¾", THREADED, GALV.	BY CUST.	1	
22	INSULATING FLANGE KIT	333017	1	
23	METER PAD 5' LONG X 4' WIDE X 6" THICK	BY CUST.	1	
24	REDUCER 3" X 2" CONCENTRIC, WELD END	356082	2	
25	FLANGE 3" WELD NECK FLAT FACE 150# STD.BORE	322036	2	
26	GASKET 3" FULL FACE 1/16" THICK	317021	2	

BILL OF MATERIAL

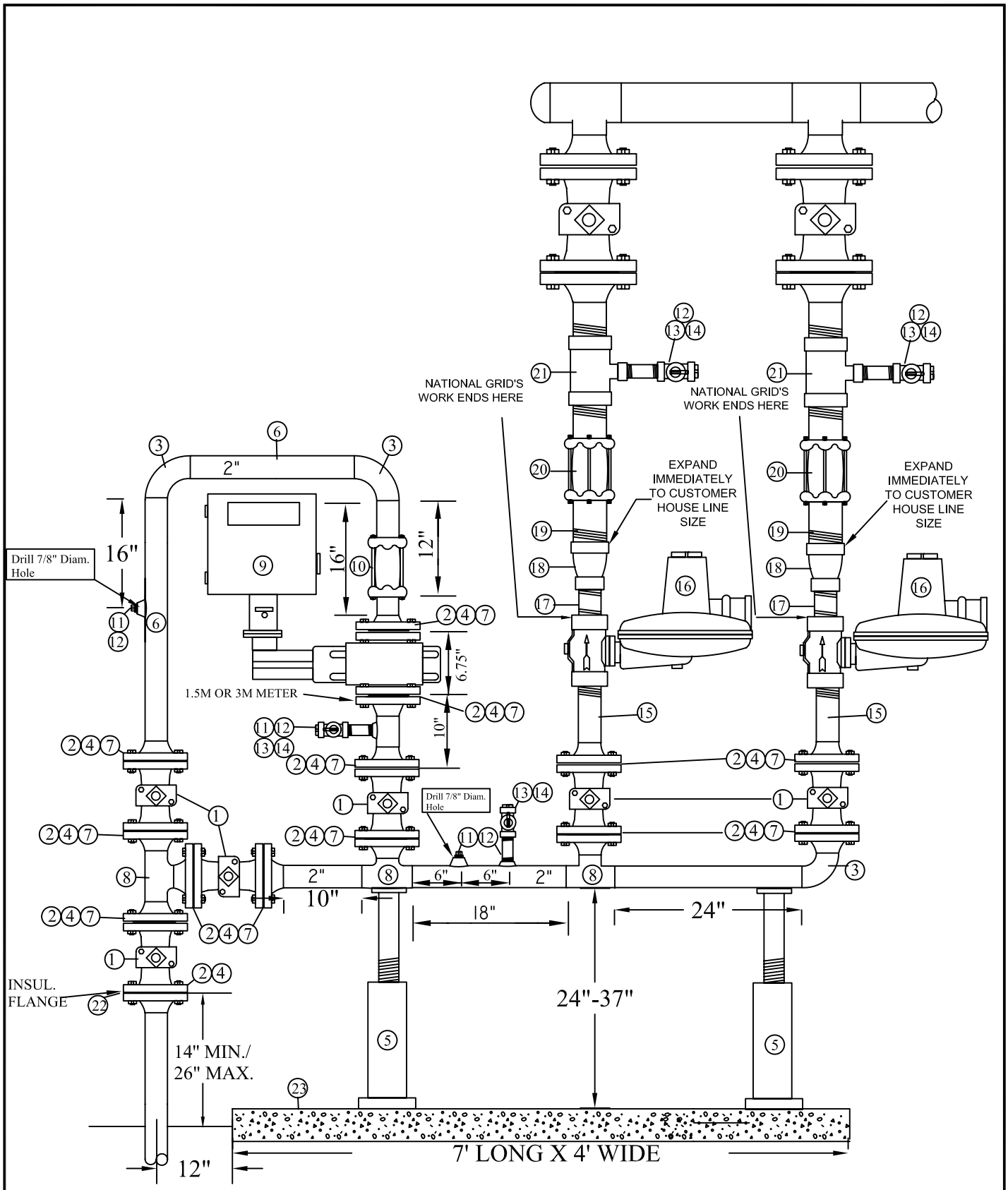

8C, 1.5M OR 3M HIGH PRESSURE
ROTARY METER, VERTICAL POSITION
WITH DUAL REGULATORS

INSTALLATION NOTES

A. FOR 99 AND 124 PSIG SERVICES, THE ACTARIS B-34 IMRV REGULATOR OR THE FISHER S-203 AND S-302 REGULATOR MUST HAVE THE ORIFICE CHANGED TO 3/8". THE ACTARIS B34IMRV AND FISHER S-302 AND S-203 REGULATOR HAVE INTERNAL MONITORS WHICH SERVE AS OVER PRESSURE PROTECTION. ALL OTHER REGULATORS (SUCH AS FISHER S-201 AND 133 SERIES) MUST USE SEPARATE RELIEF VALVES FOR OVER PROTECTION. FISHER 133 AND S-203P REQUIRE DOWNSTREAM CONTROL LINESS. FOR THESE AND OTHER REMOTE MONITORING REGULATORS, INSTALL ¾" STEEL CONTROL LINE 10 PIPE DIAMETERS OF CUSTOMER'S HOUSE LINE (10 PIPE DIAMETER STARTS AFTER THE REDUCER - ITEM 18).

B. GALVANIZED PIPE AND FITTINGS ARE THE PREFERRED MATERIALS OF CHOICE. BLACK PIPE, PRIMED AND PAINTED IS ALSO ACCEPTABLE.

C. WHERE VEHICLE TRAFFIC IS A CONCERN, PROTECTION POST ARE REQUIRED. REFER TO APPROVED NATIONAL GRID PROTECTION POST STANDARDS.

D. DO NOT WELD METER IN PLACE. USE A SPOOL PIECE.

E. ALL WELDING MUST CONFORM TO API-1104 PROCEDURES. ALL PIPING SHALL BE TESTED AT 1.5 MAOP OF INLET SERVICE PRESSURE FOR 30 MINUTES.

F. PREFABRICATED METER SETS COME WITH 2" X 6-3/4" LONG SPOOL PIECE IN PLACE OF METER.

G. 2" STRAINERS (ITEM ID 301028) AND FILTERS (ITEM ID 321025) CAN BE USED TO PROTECT EQUIPMENT FROM IN LINE DEBRIS. FOR PREFABRICATED SETS USE A FLANGED ELBOW (ITEM ID 320205) AND ROTATE FLANGED TEE AFTER INLET VALVE FOR STRAINER/FILTER INSTALLATION. SEE FIGURE 2 ON PAGE 9.

H. FOR PREFABRICATED SETS THAT REQUIRE DUAL RATES, INSTALL FLANGED TEE ON THE RISER VALVE AND THEN ROTATE FLANGED TEE ON THE PREFABRICATED SET FOR THE SECOND METER HEADER. SEE FIG 1 ON PAGE 9.

I. ELEVATED PRESSURE SHALL BE ONLY USED IF CUSTOMER'S EQUIPMENT REQUIRES IT. IT WILL NOT BE APPROVED TO DOWNSIZE HOUSE LINE.

BILL OF MATERIAL

ITEM	DESCRIPTION	ITEM I.D	QTY	MATERIAL NOTES
1	VALVE – 2" PLUG NORDSTROM FIG 143	382214	6	FLANGED ENDS
2	FLANGE 2" WELD NECK FLAT FACE	322156	12	PER ASTM A-1O5 GR. B OR A-350 LF-2
3	ELBOW 2" WELD END 90 DEG. LONG RADIUS	320232	3	STD. WALL PER A-234 WPB
4	BOLTS MACHINE – 5/8" X 2-3/4" W/2H HEX NUT	309303	56	
5	PIPE SUPPORTS SADDLE – (TOP SECTION ONLY)	308049	2	INCLUDED IN PREFABRICATED SET
	PIPE SUPPORT BASE 20"-25" HEIGHT (BOTTOM SECT)	308041	2	SEE MTRS-6475 FOR PIPE SUPPORTS
	PIPE SUPPORT BASE 26"-31" HEIGHT (BOTTOM SECT)	308052	2	CHOOSE THE BASE WHICH WILL DETERMINE
	PIPE SUPPORT BASE 32"-41" HEIGHT (BOTTOM SECT)	308051	2	THE OVERALL LENGTH OF THE SUPPORT (FROM GROUND TO BOTTOM OF PIPE)
6	PIPE 2" STD. WALL (SCH. 40)	350059	15'	PER A-106 GR. B
7	GASKET 2" FULL FACE FOR 150# FF FLANGE	317027	13	KLINGER NITRILE TYPE C-4401
8	TEE 2", WELD END STD. WALL PER A-234 WPB	371196	3	ALT. IN 1 LOCATION, USE FLANGED TEE 371139
9	METER 8C, 1.5M OR 3M TEMPERATURE CORRECTED	+	1	
10	COUPLING 2" LOCK TYPE	316383	1	
11	THRED-O-LET ¾"X 2"PIPE	372000	4	PER A-105 GRADE B
12	PLUG ¾" SOLID STEEL	352005	6	4 BY NATIONAL GRID/2 BY CUSTOMER
13	NIPPLE ¾" X 3" LONG, GALVANIZED	343134	4	2 BY NATIONAL GRID/2 BY CUSTOMER
14	VALVE ¾" LOCKWING, GALVANIZED TAMPER PROOF	315006	4	2 BYNGG/2 BY CUST. – AY McDONALD 525B
15	THREADED 2" NIPPLE X 2" FLAT FACE 150# FLANGE	343005	2	ALT USE ITEM 2 AND 6 AND THREAD ONE END
16	REGULATOR 2" ACTARIS B34IMRV/FISHER S-203	357025	2	**SEE NOTE A**
17	NIPPLE 2" X 4" LONG GALVANIZED STD. WT	BY CUST.	2	
18	REDUCER 2" X CUST. HOUSE LINE SIZE GLAV.	BY CUST.	2	
19	PIPE – CUST. HOUSE LINE SIZE. GALVANIZED	BY CUST	A/R	
20	COUPLING CUSTOMER HOUSE LINE SIZE LOCK TYPE	BY CUST	2	
21	TEE CUST. HOUSE LINE SIZE X ¾", THREADED, GALV.	BY CUST.	2	
22	INSULATING FLANGE KIT	333017	2	
23	METER PAD 7' LONG X 4' WIDE X 6" THICK	BY CUST.	1	

BILL OF MATERIAL

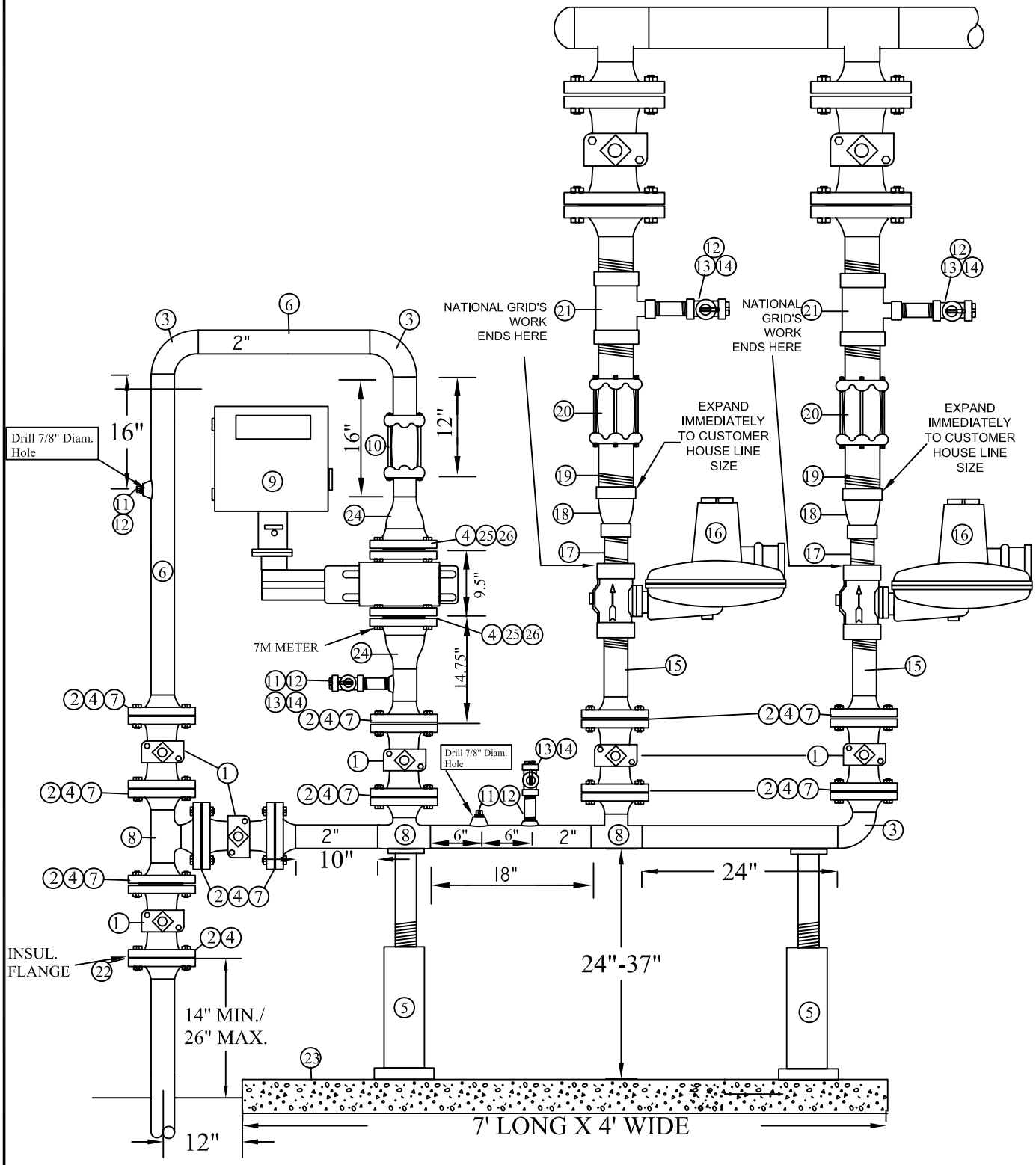

7M HIGH PRESSURE
ROTARY METER, VERTICAL POSITION
WITH DUAL REGULATORS

INSTALLATION NOTES

A. FOR 99 AND 124 PSIG SERVICES, THE ACTARIS B-34 IMRV REGULATOR OR THE FISHER S-203 AND S-302 REGULATOR MUST HAVE THE ORIFICE CHANGED TO 3/8". THE ACTARIS B34IMRV AND FISHER S-302 AND S-203 REGULATOR HAVE INTERNAL MONITORS WHICH SERVE AS OVER PRESSURE PROTECTION. ALL OTHER REGULATORS (SUCH AS FISHER S-201 AND 133 SERIES) MUST USE SEPARATE RELIEF VALVES FOR OVER PROTECTION. FISHER 133 AND S-203P REQUIRE DOWNSTREAM CONTROLS. FOR THESE AND OTHER REMOTE MONITORING REGULATORS, INSTALL ¾" STEEL CONTROL LINE 10 PIPE DIAMETERS OF CUSTOMER'S HOUSE LINE (10 PIPE DIAMETER STARTS AFTER THE REDUCER - ITEM 18).

B. GALVANIZED PIPE AND FITTINGS ARE THE PREFERRED MATERIALS OF CHOICE. BLACK PIPE, PRIMED AND PAINTED IS ALSO ACCEPTABLE.

C. WHERE VEHICLE TRAFFIC IS A CONCERN, PROTECTION POST ARE REQUIRED. REFER TO APPROVED NATIONAL GRID PROTECTION POST STANDARDS.

D. DO NOT WELD METER IN PLACE. USE A SPOOL PIECE.

E. ALL WELDING MUST CONFORM TO API-1104 PROCEDURES. ALL PIPING SHALL BE TESTED AT 1.5 MAOP OF INLET SERVICE PRESSURE FOR 30 MINUTES.

F. PREFABRICATED METER SETS COME WITH 2" X 6-3/4" LONG SPOOL PIECE IN PLACE OF METER.

G. 2" STRAINERS (ITEM ID 301028) AND FILTERS (ITEM ID 321025) CAN BE USED TO PROTECT EQUIPMENT FROM IN LINE DEBRIS. FOR PREFABRICATED SETS USE A FLANGED ELBOW (ITEM ID 320205) AND ROTATE FLANGED TEE AFTER INLET VALVE FOR STRAINER/FILTER INSTALLATION. SEE FIGURE 2 ON PAGE 9.

H. FOR PREFABRICATED SETS THAT REQUIRE DUAL RATES, INSTALL FLANGED TEE ON THE RISER VALVE AND THEN ROTATE FLANGED TEE ON THE PREFABRICATED SET FOR THE SECOND METER HEADER. SEE FIG 1 ON PAGE 9.

I. ELEVATED PRESSURE SHALL BE ONLY USED IF CUSTOMER'S EQUIPMENT REQUIRES IT. IT WILL NOT BE APPROVED TO DOWNSIZE HOUSE LINE.

BILL OF MATERIAL

ITEM	DESCRIPTION	ITEM I.D	QTY	MATERIAL NOTES
1	VALVE – 2" PLUG NODSTROM FIG 143	382214	6	FLANGED ENDS
2	FLANGE 2" WELD NECK FLAT FACE	322156	12	PER ASTM A-1O5 GR. B OR A-350 LF-2
3	ELBOW 2" WELD END 90 DEG. LONG RADIUS	320232	3	STD. WALL PER A-234 WPB
4	BOLTS MACHINE – 5/8" X 2-3/4" W/2H HEX NUT	309303	56	
5	PIPE SUPPORTS SADDLE – (TOP SECTION ONLY)	308049	2	INCLUDED IN THE PREFABRICATED SET
	PIPE SUPPORT BASE 20"-25" HEIGHT (BOTTOM SECT)	308041	2	SEE MTRS-6475 FOR PIPE SUPPORTS
	PIPE SUPPORT BASE 26"-31" HEIGHT (BOTTOM SECT)	308052	2	CHOOSE THE BASE WHICH WILL DETERMINE
	PIPE SUPPORT BASE 32"-41" HEIGHT (BOTTOM SECT)	308051	2	THE OVERALL LENGTH OF THE SUPPORT (FROM GROUND TO BOTTOM OF PIPE)
6	PIPE 2" STD. WALL (SCH. 40)	350059	15'	PER A-106 GR. B
7	GASKET 2" FULL FACE FOR 150# FF FLANGE	317027	11	KLINGER NITRILE TYPE C-4401
8	TEE 2", WELD END STD. WALL PER A-234 WPB	371196	3	ALT. IN 1 LOCATION, USE FLANGED TEE 371139
9	METER 7M TEMPERATURE CORRECTED	+	1	
10	COUPLING 2" LOCK TYPE	316383	1	
11	THRED-O-LET ¾"X 2"PIPE	372000	4	PER A-105 GRADE B
12	PLUG ¾" SOLID STEEL	352005	4	3 BY NATIONAL GRID/1 BY CUSTOMER
13	NIPPLE ¾" X 3" LONG, GALVANIZED	343134	4	2 BY NATIONAL GRID/1 BY CUSTOMER
14	VALVE ¾" LOCKWING, GALVANIZED TAMPER PROOF	315006	4	2 BY NGG/1 BY CUST. – AY McDONALD 525B
15	THREADED 2" NIPPLE X 2" FLAT FACE 150# FLANGE	343005	2	ALT USE ITEM 2 AND 6 AND THREAD ONE END
16	REGULATOR 2" ACTARIS B34IMRV/FISHER S-203	357025	2	**SEE NOTE A**
17	NIPPLE 2" X 4" LONG GALVANIZED STD. WT	BY CUST.	2	
18	REDUCER 2" X CUST. HOUSE LINE SIZE GLAV.	BY CUST.	2	
19	PIPE – CUST. HOUSE LINE SIZE. GALVANIZED	BY CUST.	2	
20	COUPLING CUSTOMER HOUSE LINE SIZE LOCK TYPE	BY CUST.	2	
21	TEE CUST. HOUSE LINE SIZE X ¾", THREADED, GALV.	BY CUST.	2	
22	INSULATING FLANGE KIT	333017	1	
23	METER PAD 7' LONG X 4' WIDE X 6" THICK	BY CUST.	1	
24	REDUCER 3" X 2" CONCENTRIC, WELD END	356082	2	
25	FLANGE 3" WELD END FLAT FACE	322036	2	PER ASTM A-105 GR. B
26	GASKET 3" FULL FACE	317028	2	

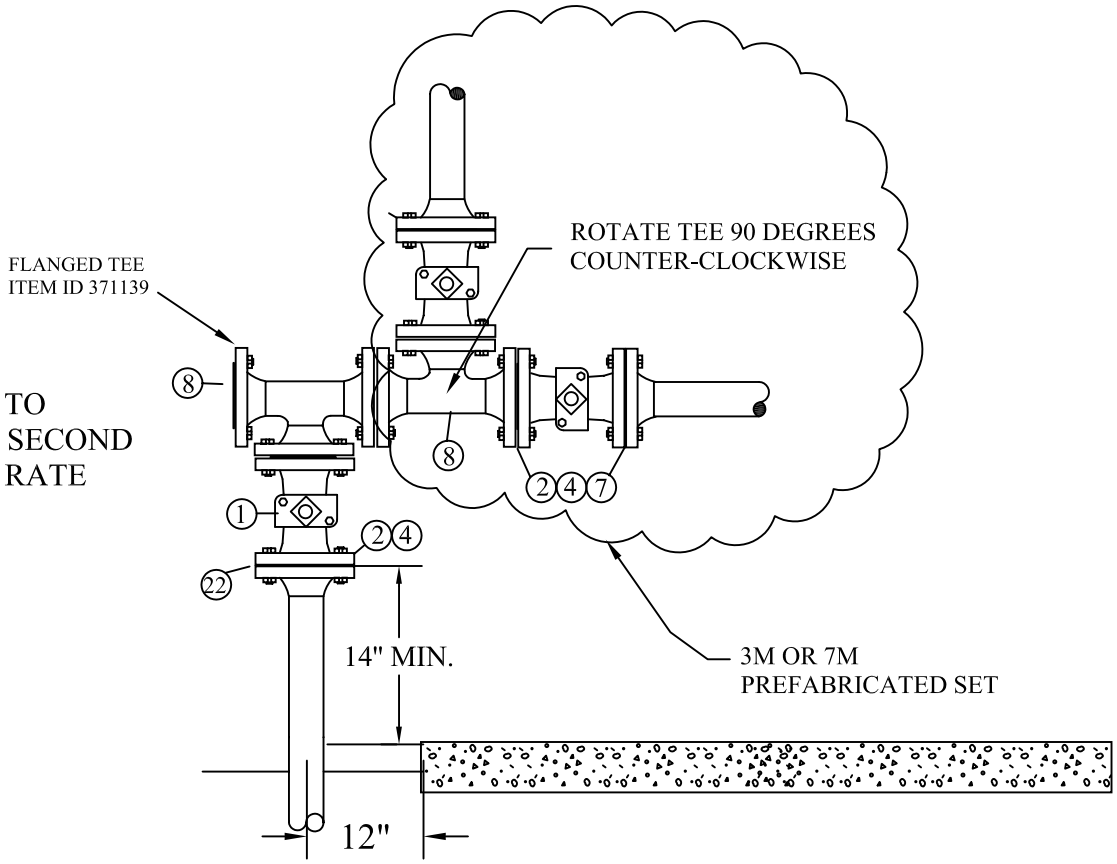

FIGURE 1 - FOR DUAL RATES

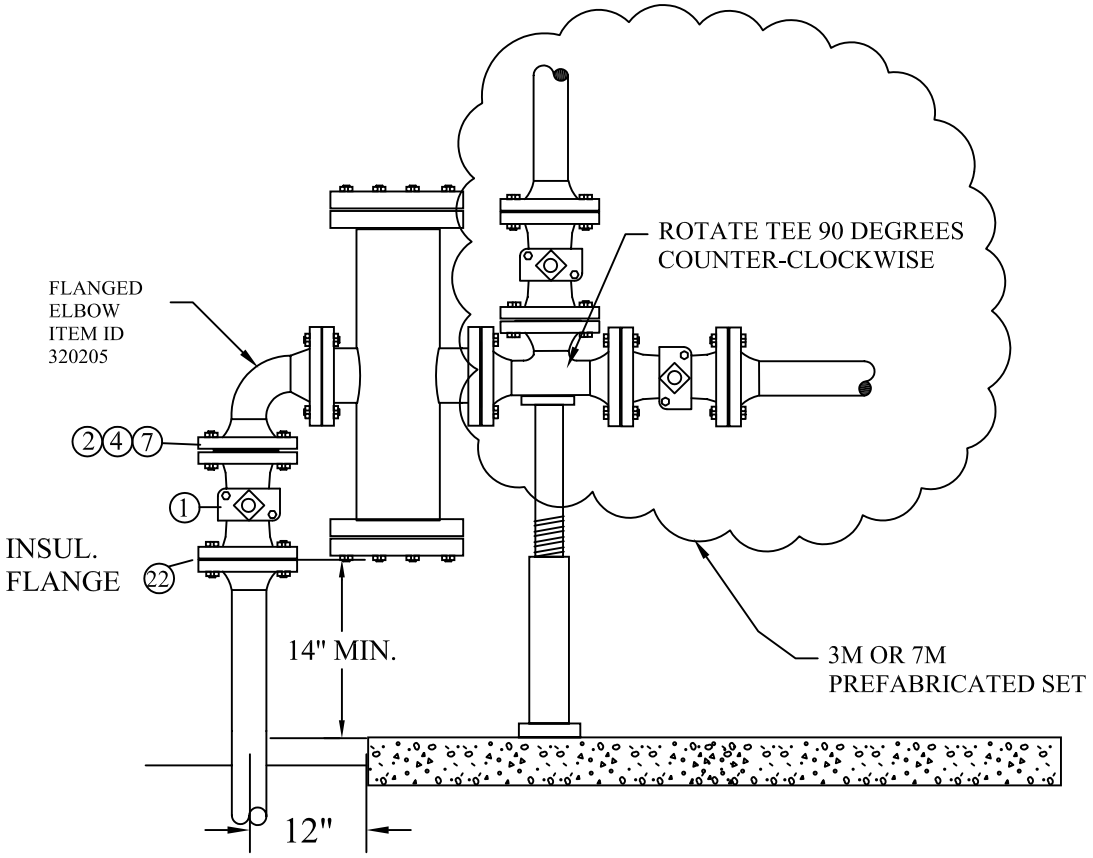

FIGURE 2 - FOR
FILTER/STRAINER
INSTALLATIONS

PREFERRED FOOTING CONSTRUCTION FOR SUPPORTING GAS METER HEADERS WHOSE CONFIGURATIONS CONTAIN MORE THAN ONE PIPE SUPPORT

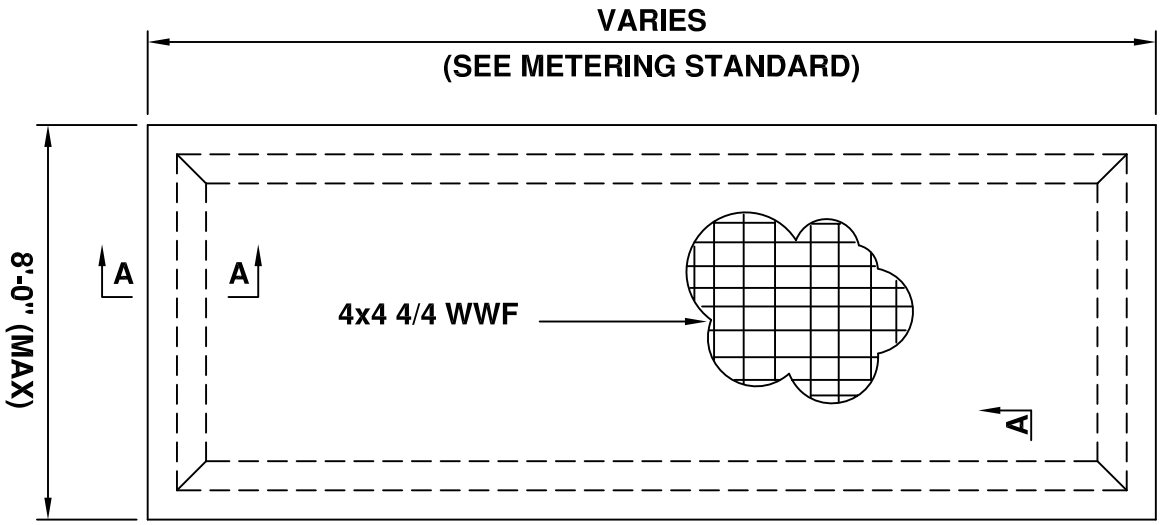

PLAN

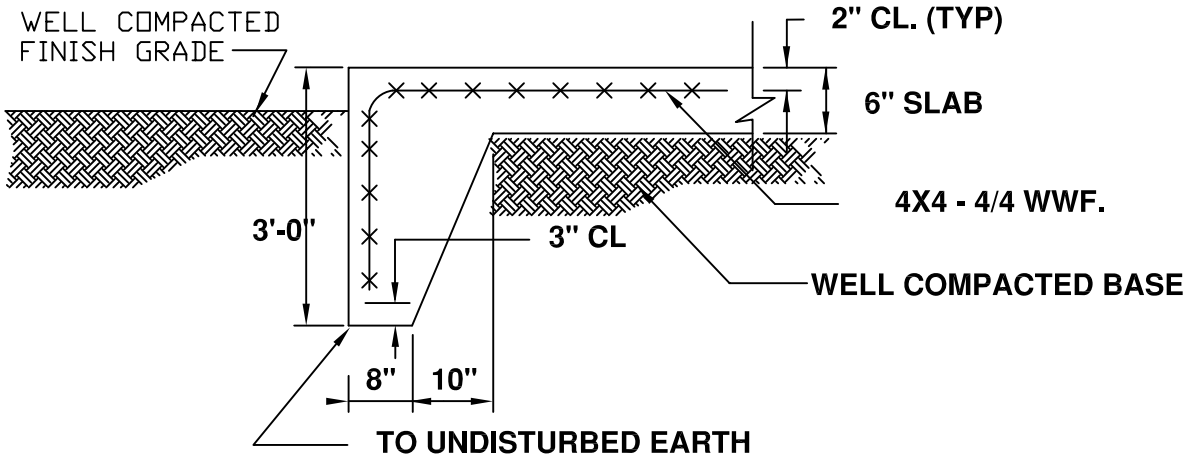

SECT A-A

NOTES

1. THIS CONSTRUCTION STANDARD SHALL BE USED FOR SUPPORTING GAS METER SETS
2. ALL CONCRETE IS TO DEVELOP TO A MINIMUM COMPRESSIVE STRENGTH OF Fc=3000 psi AT THE TIME OF USE.
3. REINFORCING STEEL SHALL CONFORM TO APPLICABLE ASTM STANDARDS UP TO GRADE 60.
4. CONCRETE DESIGN AND CONSTRUCTION SHALL CONFORM TO ACI STANDARD "BUILDING CODE REQUIREMENTS" FOR REINFORCED CONCRETE (ACI).
5. FOUNDATION (FOOTING) SIZE AND LOCATION WILL BE AGREED UPON BYNATIONAL GRID PRIOR TO WORK ORDER APPROVAL.
6. CONCRETE FOUNDATION OR FOOTING SHALL BE INSTALLED BY THE CUSTOMER BEFORE THE SERVICE IS INSTALLED BY KEYSPAN

nationalgrid LI, MA, NH, NYC	CONCRETE FOUNDATION AND/OR FOOTINGS FOR ROTARY GAS METER OUTSIDE LOCATIONS	
REVISIONS: MADE APPLICABLE FOR ALL REGIONS	DATE: 07/01/2003	EFFECTIVE DATE: 05/15/2007
	DESIGN: GJK	STD. DWG.
	DRAWN: HF	NO. MTRS-6505

ALTERNATE CONSTRUCTION METHOD

CONCRETE FILLED SONO-TUBE FOOTING MAY BE USED TO SUPPORT GAS METER HEADER CONFIGURATIONS REQUIRING ONE (1) PIPE SUPPORT

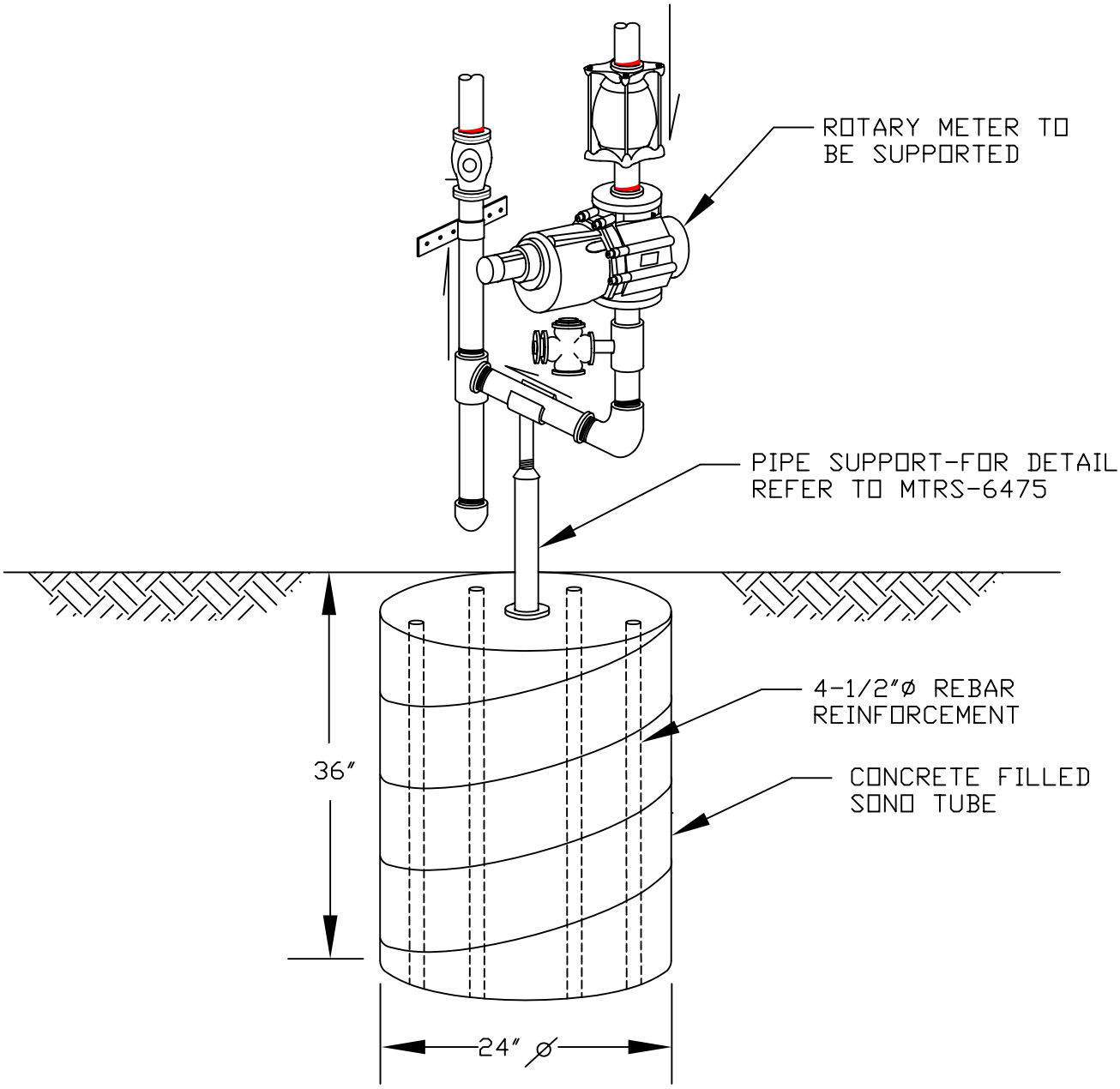

NOTE: THIS APPLICATION REQUIRES 10 BAGS OF CONCRETE MIX.
(1 BAG = 1 CU. FT. = 60 LB.)

REMOTE WALL FOR SUPPORT OF ROTARY AND MULTI METER HEADERS

FRONT VIEW

KED DOES NOT ACCEPT LIABILITIY FOR THE CONSTRUCTION OF THE WALL BUILT BY THE CUSTOMER.

NOTES:

1. REMOTE WALL AND SLAB TO BE CONSTRUCTED BY THE CUSTOMER.
2. WALL MAY BE CONSTRUCTED WITH EITHER CEMENT BLOCK OR POURED CONCRETE
3. WALL IS USED FOR SUPPORT OF METER HEADER.
4. LENGTH OF WALL WILL VARY WITH SIZE OF HEADER, AND WILL BE SPECIFIED BY CONSTRUCTION LEAD PERSON.

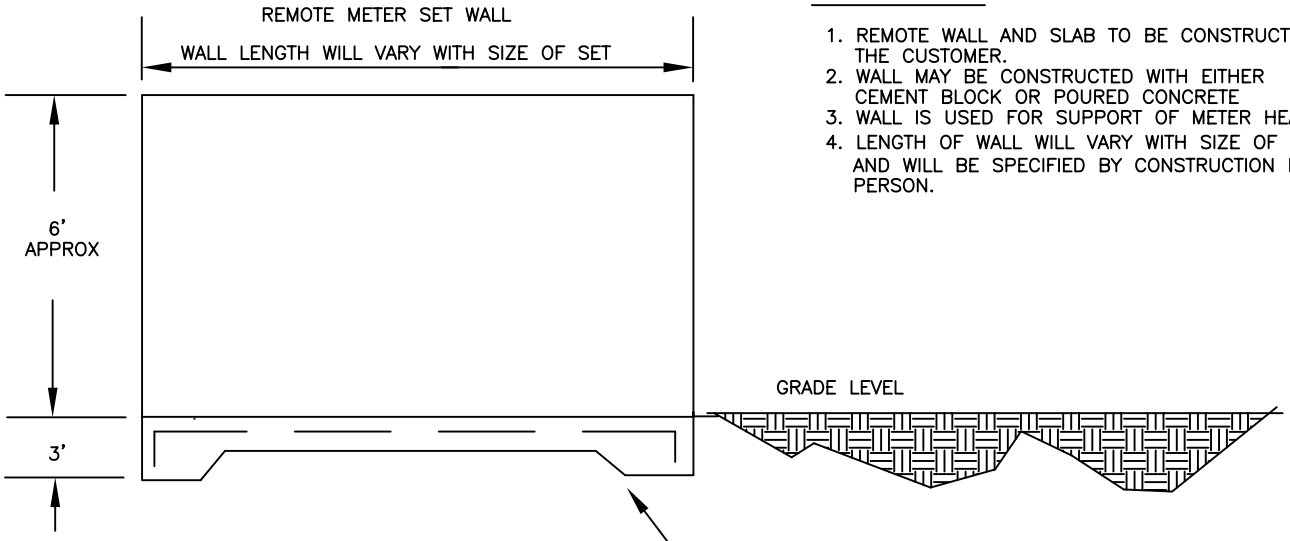

SIDE VIEW

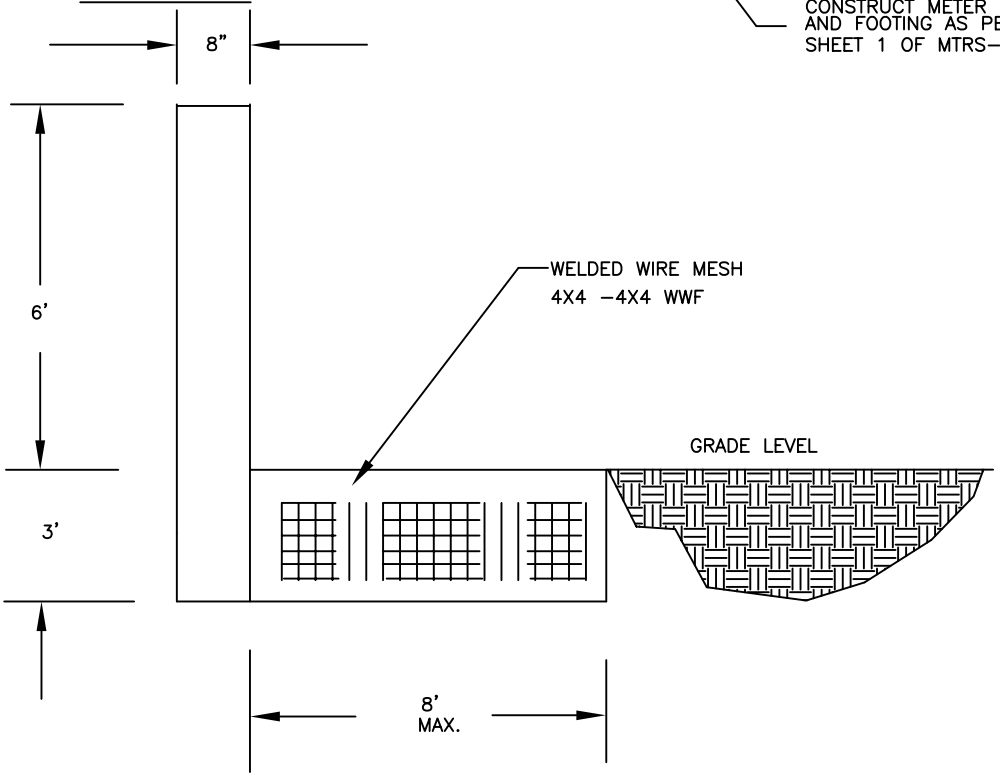

GENERAL NOTES

A. THESE GENERAL NOTES APPLY TO ALL ROTARY GAS METER CONSTRUCTION STANDARDS.
B. FOR TYPICAL L.P BOOSTER LAYOUT BY THE CUSTOMER, SEE MTRS-6535.
C. FLOW DIRECTION OF FILTER, REGULATOR AND METER SHALL BE IN ACCORDANCE WITH ARROW INDICATOR ON BODY PARTS.
D. BYPASS VALVE SHALL BE CLOSED AND LOCKED BY NATIONAL GRID.
E. RISER PIPE SHALL BE COVERED OR IN CONTACT WITH CONCRETE.
F. PIPING TO SCHOOL BLDG. MUST COMPLY WITH THE CODE REQUIREMENT OF THE " NEW YORK STATE MANUAL OF PLANNING STANDARDS FOR SCHOOL BUILDINGS". WHICH STATES THAT WELDED CONSTRUCTION IS REQUIRED FOR PIPE SIZES 3" IN DIAMETER AND OVER. SECTION 709-F-1.
G. CONTRACTOR SHALL INSTALL VENT PIPING WHEN SPECIFIED. THE SIZE AND LOCATION TO BE DETERMINED BY NATIONAL GRID. SEE SERV-6225.
H. UNLESS OTHERWISE SPECIFIED, ALL PIPING MUST BE IN COMPLIANCE WITH NFPA-54 AND NATIONAL GRID SPECIFICATIONS AND REQUIREMENTS FOR GAS INSTALLATIONS. WELDED CONSTRUCTION IS REQUIRED AS PER NFPA SEC. 2.6.8 d1.
I. A SINGLE REGULATOR AND ASSOCIATED PIPING INSTALLATION IS MOST ACCEPTABLE, AND, PARALLEL REGULATORS ARE INSTALLED ONLY WHEN CONTINUITY OF SUPPLY TO THE CUSTOMER IS A PRIORITY. NATIONAL GRID MUST AGREE ON FINAL DESIGN.
J. WHERE SOIL IS OR WILL BE DISTURBED, A CONCRETE SLAB (FOUNDATION) FOR FOOTING SHALL BE USED AND PROVIDED BY THE CUSTOMER. SIZE AND LOCATION WILL BE AGREED UPON BY NATIONAL GRID. (USE THE MINIMUM ACCEPTABLE SIZE) SEE MTRS-6505-LI.
K. ALL UNCOATED WELDED PIPING ON METER HEADERS SHALL BE PRIMED WITH A RUST INHIBITING PRIMER, AND PAINTED WITH AN OIL BASED, ALKYD RUSTOLEUM PRODUCT, OR EQUAL. FOR METER SETS WHICH USE GALVANIZED, SCREWED PIPING, PAINTING IS NOT REQUIRED BUT IS RECOMMENDED. ALL UNPAINTED METER HEADERS 2" AND ABOVE INSTALLED BY NATIONAL GRID SHALL BE PAINTED PER CORR-5000, COATING SYSTEM "E".
L. THE GAS SERVICE LOCATION TAG SHALL BE INSTALLED PER CUST-5230
M. ALL FITTING AND MATERIALS, LOCATED DOWNSTREAM OF THE METER SHALL BE DESIGNED AND RATED FOR NATURAL GAS INDUSTRY. THIS INCLUDES BUT IS NOT LIMITED TO VALVES, COUPLINGS AND APPLIANCES.
N. A METER BYPASS SHOULD ONLY BE INSTALLED WHERE IT WOULD BE DIFFICULT OR COSTLY TO INTERRUPT SERVICE TO THE CUSTOMER.
O. AFTER PURGING THE SERVICE, AND BEFORE INSTALLING THE METER, THE LOCKWING METER VALVE ON THE RISER PIPE, AND ON THE BYPASS, SHALL BE LOCKED BY NATIONAL GRID.
P. SERVICE RISER, METER HEADER AND METER SHALL BE LOCATED TO PREVENT DAMAGE CAUSED BY VEHICLES AND MECHANICAL EQUIPMENT. WHERE A PROTECTED AREA IS NOT AVAILABLE, ADDITIONAL PROTECTION IS REQUIRED AND SHALL BE INSTALLED BY USING CONCRETE FILED STEEL POST SEE MTRS-6060.
Q. THE METER SHALL BE PLUMB AND LEVEL
R. ALL EXPOSED THREADED PIPING AND FITTINGS SHALL BE GALVANIZED.
S. ALL PIPING, FITTING, ETC. SHALL BE THOROUGHLY CLEANED OF ALL FOREIGN MATTER BEFORE BEING INSTALLED.
T. PIPE STRAPS OR HANGERS ARE TO BE USED FOR SUPPORT. THE PLACEMENT OF THE SUPPORT DEPENDS ON THE CONFIGURATION OF THE METER SET AND CUSTOMER'S HOUSE LINE.
U. THE METER VALVES SHALL FACE FORWARD FROM THE WALL FOR EASY ACCESSIBILITY.
V. NO CLOSE (FULLY THREADED) NIPPLES SHALL BE INSTALL ON METER SETS.
W. MAINTAIN A ½" MINIMUM CLEARANCE BETWEEN REGULATOR AND METER OR ANY OTHER FOREIGN STRUCTURE. IF NECESSARY, SWING REGULATOR OR METER TO OBTAIN CLEARANCE,
X. THESE STANDARDS REFLECT THREADED PIPING FOR SYSTEMS THAT OPERATE AT ½ PSIG OR LESS AND HAVE 4" DIAMETER OR SMALLER PIPING, FOR HIGHER PRESSURE AND OR LARGER DIAMETER PIPE, THE STANDARD REFLECTS USE OF WELDED CONSTRUCTION. THIS IS IN ACCORDANCE WITH THE NATIONAL FUEL GAS CODE.
Y. THE INSULATED FLANGE KIT SHALL BE INSTALLED AT THE SAME TIME THAT THE SERVICE LINE VALVE IS INSTALLED.
Z. NATIONAL GRID WILL SUPPLY ONLY THE NUMBER OF PIPE SUPPORTS LISTED ON THE BILL OF MATERIAL IN THE APPLICABLE METERING STD. FOR INSTALLATION BY THE CUSTOMER OR HIS CONTRACTOR DETAILS OF THE PIPE SUPPORT ARE PROVIDED IN MTRS-6475-LI

nationalgrid LI	**GENERAL NOTES FOR ROTARY GAS METERS**	
	DATE: 07/01/2003	EFFECTIVE DATE: 07/1/2003
	DRAWN: ML	STD. DWG. No. **MTRS-6545**

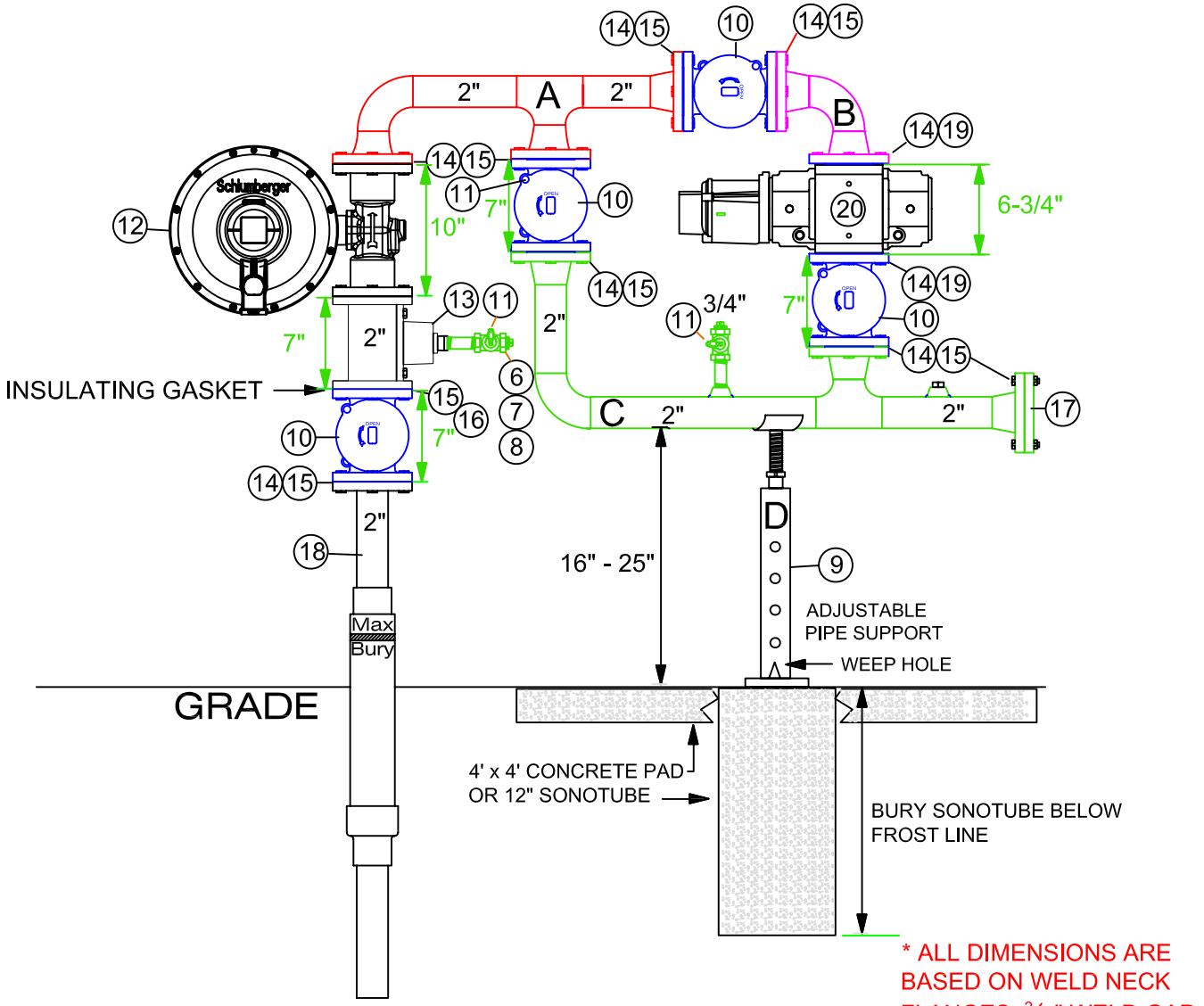

* ALL DIMENSIONS ARE BASED ON WELD NECK FLANGES, 3/32" WELD GAP AND 1/16" THICK GASKETS

PREFAB COMPONENTS

ITEM ID 00301310 ORACLE
new PEOPLESOFT

COMPONENT A

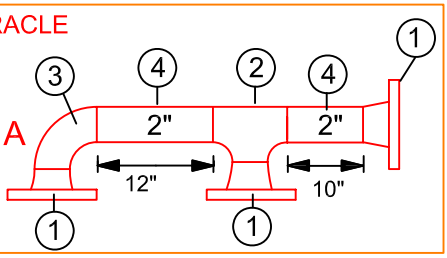

ITEM ID 00320205 ORACLE
new PEOPLESOFT

COMPONENT B

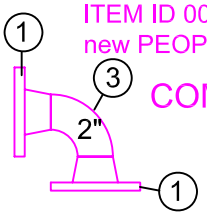

ITEM ID 00301311 ORACLE
new PEOPLESOFT

COMPONENT C

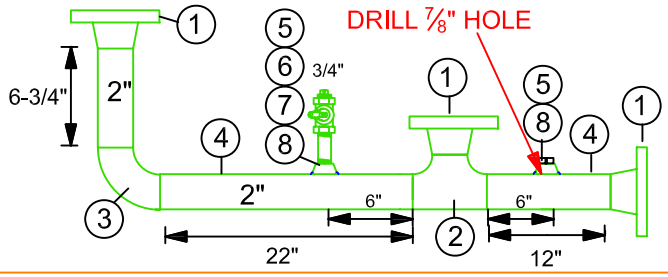

METER SPOOL PIECE
ITEM ID 00301315 ORACLE
new PEOPLESOFT

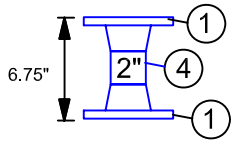

COMPONENT D

nationalgrid

LI–MA–NH–NYC–RI–UNY

8C - 3M PREFAB HEADER 800 SCFH TO 3,000 SCFH 7", 14" OR 1 PSIG OUTLET

REVISIONS: NEW STANDARD

DATE: 02/15/2009		EFFECTIVE DATE: 02/15/2009
DESIGN: B. FOSTER/P. GUGLIOTTA		STD. DWG. NO. **MTRS-6616**
DRAWN: B. FOSTER/P. GUGLIOTTA		

FIELD INSTALLATION NOTES

A. FOR 99 AND 124 PSIG SERVICES, THE ACTARIS B-34 IMRV REGULATOR OR THE FISHER S-203 AND S-302 REGULATOR MUST HAVE THE ORIFICE CHANGED TO 3/8". THE ACTARIS B34IMRV AND FISHER S-302 AND S-203 REGULATOR HAVE INTERNAL MONITORS WHICH SERVE AS OVER PRESSURE PROTECTION. ALL OTHER REGULATORS (SUCH AS FISHER S-201 AND 133 SERIES) MUST USE SEPARATE RELIEF VALVES FOR OVER PROTECTION. FISHER 133 AND S-203P REQUIRE DOWNSTREAM CONTROL LINES. FOR THESE AND OTHER REMOTE MONITORING REGULATORS, INSTALL CONTROL LINES 10 PIPE DIAMETERS ON STRAIGHT LENGTH OF PIPE. MAXIMUM CAPACITY OF A FISHER S-302 IS 1500 CFH ON THE 60 SYSTEM.

B. WHERE VEHICLE TRAFFIC IS A CONCERN, PROTECTION POST ARE REQUIRED. REFER TO APPROVED NATIONAL GRID PROTECTION POST STANDARDS MTRS-6060.

C. DO NOT WELD METER IN PLACE. USE A SPOOL PIECE.

D. ALL PREFAB PIPING SHALL SURFACE PREPARATION, PRIMING AND PAINTING SPECIFICATION: ALL SURFACES SHALL BE SOLVENT CLEANED IN ACCORDANCE WITH SSPC SP#1 STANDARD TO REMOVE ALL SOLUBLE SURFACE CONTAMINATES. APPLICATION SHALL BE ONE COAT OF SOLVENT BASED GRAY PRIMER MINIMUM OF 2-3 MILS, FOLLOWED BY ONE COAT OF SOLVENT-BASED ASA #49 GRAY ACRYLIC ENAMEL MINIMUM OF 2-3 MILS, OR EQUIVALENT AS APPROVED BY NATIONAL GRID ENGINEERING.

PREFABRICATION NOTES FOR ITEMS 1- 9

E. ALL WELDING MUST CONFORM TO API-1104 PROCEDURES.

F. RADIOGRAPH SHALL BE 10% OF ALL WELDS OR PER NATIONAL GRID'S WELDING POLICY PROCEDURE.

G. ALL FLANGE OPENINGS SHALL BE COVERED WITH PLASTIC CAPS.

H. ASSEMBLY SHALL BE SUPPLIED IN 4 PIECES (3 PIPING & 1 FOR SUPPORT).

I. FITTINGS SHALL CONFORM TO ASTM A-234 WPB STD. WALL AND ASTM A-105.

J. PIPING SHALL CONFORM TO API-5L GRADE B OR A-106 GRADE B.

K. ALL PIPING SHALL BE PRESSURE TESTED TO 90 PSIG FOR 5 MINUTES OR PER NATIONAL GRID'S PRESSURE TESTING PROCEDURE.

BILL OF MATERIAL

ITEM	DESCRIPTION	ORACLE ITEM I.D	PEOPLE SOFT ID	QTY	MATERIAL NOTES
	PREFABRICATED ITEMS 1 – 8 LISTED BELOW				
1	FLANGE 2" WELD NECK FLAT FACE	00322156	0810533	10	PER ASTM A-1O5 GR. B OR A-350 LF-2
2	TEE 2", WELD END STD. WALL PER A-234 WPB	00371196	6012154	2	
3	ELBOW 2" WELD END 90 DEG. LONG RADIUS	00320232	6005621	3	4801246 IN R.I. STD WALL, PER A-234 WPB
4	PIPE 2" STEEL, STD. WALL (SCH. 40)	00350059	6001110	6'	PER A-106 GR. B
5	THRED-O-LET ¾"X 2"PIPE 3000#	00372000	NEW	2	PER A-105 GRADE B
6	NIPPLE ¾" X 3" LONG	00343134	6007103	2	
7	VALVE ¾" LOCKWING, TAMPER PROOF	00315006	6008330	2	
8	PLUG ¾" SOLID STEEL	00352005	6009604	3	
	OR PREFABRICATED COMPLETED COMPONENTS:				
A	2 INCH FLANGED REGULATOR OUTLET PIECE	00301310	NEW	1	
B	FLANGED ELBOW	00320205	NEW	1	
C	FLANGED METER OUTLET PIECE	00301311	NEW	1	
D	SPOOL PIECE 8C, 1.5M OR 3M METER 2" X 6.75"	00301315	NEW	1	
	REMAINING ITEMS 9 – 20				
9	PIPE SUPPORT 16"-25" HEIGHT (BOTTOM SECTION)	00308041	0810350	1	FOR ADDITIONAL SUPPORTS SEE MTRS-6475
	ADJUSTIBLE FROM 16" – 25"	00308049	Incl. above	1	
10	VALVE – 2" BALL VALVE CLASS 150# FLANGED ENDS	00382024	new	4	
11	LOCKING DEVICE	00136506	3020150	3	
12	REGULATOR 2" ACTARIS B34IMRV/FISHER S-203 FLANGED ENDS ½" ORIFICE GREEN/WHITE SPRING 5.5" – 7.2" W.C. SET AT 7" W.C.	00357004	BY ENG.	1	
13	STRAINER 2" FLANGED	00301029	New	1	FLEXITALLIC SIGMA 511 PINK
14	GASKET 2" FULL FACE FOR 150# FF FLANGE	00138057	6003869	11	
15	BOLTS MACHINE – 5/8" X 2-1/4" W/2H HEX NUT	00110044	4800368	48	NUT 4800373
16	INSULATING FLANGE KIT / GASKET 150#	00333017	4801273	1	6003533 IN UNY
17	FLANGE, BLIND 2", CLASS 150# FF	00322182	4801287	1	
18	RISER 2"	Field	Field	1	
19	BOLTS FOR METER 5/8" X 1.5" LONG	00362027	Meter Ops.	8	
20	METER 8C, 1.5M OR 3M TEMPERATURE CORRECTED	Meter Ops.	Meter Ops.	1	

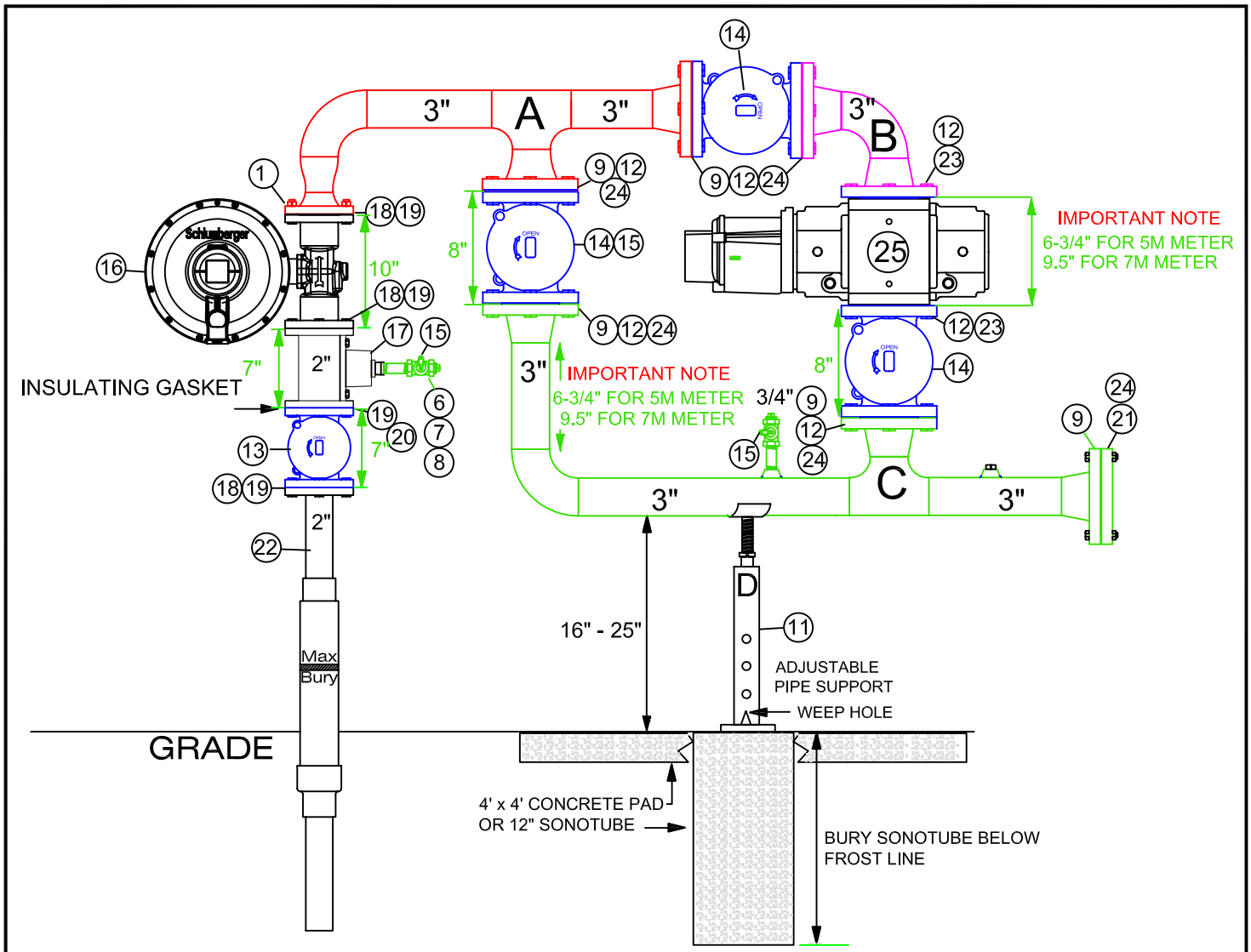

PREFAB COMPONENTS

ITEM ID 00301312 ORACLE
new PEOPLESOFT
COMPONENT A

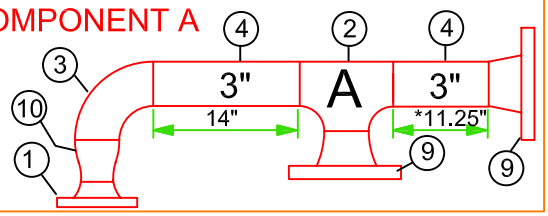

ITEM ID 00301313 ORACLE
NEW PEOPLESOFT
COMPONENT B

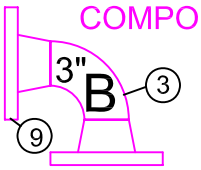

ORACLE ITEM 00301316
PEOPLESOFT ITEM new
7M METER SPOOL PIECE
COMPONENT D

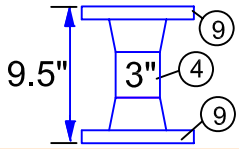

COMPONENT C

IMPORTANT NOTE
6-3/4" FOR 5M METER
9.5" FOR 7M METER

ITEM ID 7M 00301314 ORACLE
ITEM ID 5M PEOPLESOFT NEW
ITEM ID 7M PEOPLESOFT NEW

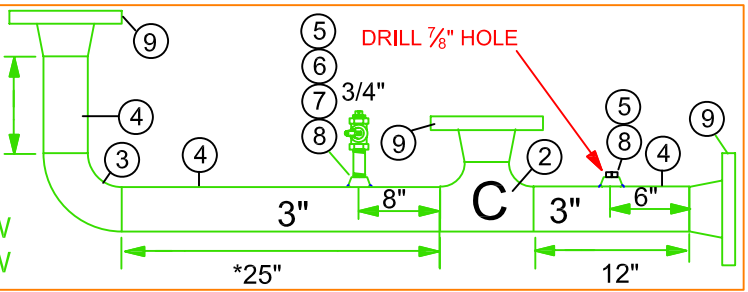

* ALL DIMENSIONS ARE BASED ON WELD NECK FLANGES, 3/32" WELD GAP AND 1/16" THICK GASKETS

nationalgrid

LI–MA–NH–NYC–RI–UNY

5M AND 7M PREFAB HEADER UP TO 7,000 SCFH 7", 14" OR 1 PSIG OUTLET

REVISIONS: NEW STANDARD

DATE: 02/15/2009	EFFECTIVE DATE: 02/15/2009
DESIGN: B. FOSTER/P. GUGLIOTTA	STD. DWG. NO. **MTRS-6617**
DRAWN: B. FOSTER/P. GUGLIOTTA	

INSTALLATION NOTES

A. FOR 99 AND 124 PSIG SERVICES, THE ACTARIS B-34 IMRV, B38 SERIES REGULATOR OR THE FISHER S-203 AND S-302 REGULATOR MUST HAVE THE ORIFICE CHANGED TO 3/8". THE ACTARIS B34IMRV AND FISHER S-302 AND S-203/8/9 REGULATORS HAVE INTERNAL MONITORS WHICH SERVE AS OVER PRESSURE PROTECTION. ALL OTHER REGULATORS (SUCH AS FISHER S-201 AND 133 SERIES) MUST USE SEPARATE RELIEF VALVES FOR OVER PRESSURE PROTECTION. FISHER 133 AND S-203P REQUIRE DOWNSTREAM CONTROL LINES. FOR THESE AND OTHER REMOTE MONITORING REGULATORS, INSTALL CONTROL LINE 10 PIPE DIAMETERS DOWNSTREAM ON STRAIGHT LENGTH ON CUSTOMRE'S HOUSE LINE. CONTACT ENGINEERING FOR PROPER REGULATOR SIZING

B. WHERE VEHICLE TRAFFIC IS A CONCERN, PROTECTION POST ARE REQUIRED. REFER TO APPROVED NATIONAL GRID PROTECTION POST STANDARDS MTRS-6060.

C. DO NOT WELD METER IN PLACE. USE A SPOOL PIECE.

D. ALL PREFAB PIPING SHALL SURFACE PREPARATION, PRIMING AND PAINTING SPECIFICATION: ALL SURFACES SHALL BE SOLVENT CLEANED IN ACCORDANCE WITH SSPC SP#1 STANDARD TO REMOVE ALL SOLUBLE SURFACE CONTAMINATES. APPLICATION SHALL BE ONE COAT OF SOLVENT BASED GRAY PRIMER MINIMUM OF 2-3 MILS, FOLLOWED BY ONE COAT OF SOLVENT-BASED ASA #49 GRAY ACRYLIC ENAMEL MINIMUM OF 2-3 MILS, OR EQUIVALENT AS APPROVED BY NATIONAL GRID ENGINEERING.

PREFABRICATION NOTES FOR ITEMS 1- 11

E. ALL WELDING MUST CONFORM TO API-1104 PROCEDURES.

F. ALL PIPING SHALL BE TESTED AT 90 PSIG MINIMUM FOR 5 MINUTES

G. 10% OF THE WELDS SHALL BE RADIOGRAPHED PER API-1104 OR PER NATIONAL GRID'S WELDING POLICY PROCEDURES.

H. ALL OPEN END FLANGE OPENINGS SHALL BE COVERED WITH PLASTIC CAPS.

I. ASSEMBLY SHALL BE SUPPLIED IN 4 PIECES (3 PIPING & 1 FOR SUPPORT).

J. FITTINGS SHALL CONFORM TO ASTM A-234 WPB STD. WALL AND ASTM A-105.

K. PIPING SHALL CONFORM TO API-5L GRADE B OR A-106 GRADE B.

BILL OF MATERIAL

ITEM	DESCRIPTION	ORACLE ITEM ID	PEOPLE SOFT ITEM ID	QTY	MATERIAL NOTES
	PREFABRICATED ITEMS 1 – 10 LISTED BELOW				
1	FLANGE 2" WELD NECK FLAT FACE CLASS 150#	00322156	0810533	1	PER ASTM A-1O5 GR. B OR A-350 LF-2
2	TEE 3", WELD END STD. WALL PER A-234 WPB	00371200	4801571	2	
3	ELBOW 3" WELD END 90 DEG. LONG RADIUS	00320245	6005720	3	STANDARD WALL, PER A-234 WPB
4	PIPE 3" STEEL, STD. WALL (SCH. 40)	00350109	4800573	5'	PER A-106 GR. B
5	THRED-O-LET ¾"X 2"PIPE 3000#	00372000	New	3	PER A-105 GRADE B
6	NIPPLE ¾" X 3" LONG	00343134	6007103	2	
7	VALVE ¾" LOCKWING, TAMPER PROOF	00315006	6008330	2	
8	PLUG ¾" SOLID STEEL OR C.I.	00352005	6009604	3	
9	FLANGE 3" WELD NECK FLAT FACE CLASS 150#	00322036	0810950	9	PER ASTM A-1O5 GR. B OR A-350 LF-2
10	REDUCER 3" X 2" CONC., STD. WALL, WELD END	00356082	6013133	1	PER ASTM A234-WPB
	OR PREFABRICATED COMPLETED COMPONENTS				
A	2" X 3" FLANGED REGULATOR OUTLET	00301312	NEW	1	
B	3" FLANGED ELBOW	00301313	NEW	1	
C 5M	5M FLANGED METER OUTLET OR	Non stock	NEW	1	
C 7M	7M FLANGED METER OUTLET	00301314	NEW	1	
D 5M	5M FLANGED SPOOL PIECE	-	NEW	1	
D 7M	7M FLANGED SPOOL PIECE	00301316	NEW	1	
	REMAINING ITEMS 11 - 25				
11	PIPE SUPPORT 16"-25" HEIGHT (BOTTOM SECT)	00308041	0810350	1	FOR ADDITIONAL SUPPORTS SEE MTRS-6475
	ADJUSTABLE FROM 16" – 25" (TOP SECTION)	00308049	Incl. above		
12	GASKET 3" CLASS 150# FULL FACE	00317021	6003547	8	FLEXITALLIC SIGMA 511 PINK OR APPROVED EQ.
13	VALVE – 2" BALL VALVE CLASS 150# FLANGED ENDS	00382024	new	1	
14	VALVE - 3" BALL VALVE CLASS 150# FLANGED ENDS	00382025	new	3	
15	LOCKING DEVICE	00136506	3020150	3	
16	REGULATOR 2" FLANGED ENDS			1	REGULATORS MUST BE SIZED FOR THE FULL
	ACTARIS B34IMRV	00357004			CAPACITY AT MINIMAL OPERATING MAIN PRESSURES
	ACTARIS B38 IMR	By Eng	By Eng.		AND MUST BE RATED FOR MAXIMUM OPERATING
	AMERICAN 1843 WITH OPSO				PRESSURES. CONTACT ENGINEERING.
	FISHER S-203				
	FISHER S-208/209 WITH VSX SLAM SHUT				
17	STRAINER 2" FLANGED	00301029	new	1	
18	GASKET 2" FULL FACE FOR 150# FF FLANGE	00138057	6003869	3	
19	BOLTS MACHINE – 5/8" X 2-1/4" FHN HEX NUT	00110044	4800368	16	ALSO NUT 4800373
20	INSULATING FLANGE KIT / GASKET 150#	00333017	4801273	1	UNY 6003533
21	FLANGE BLIND 3"	00322196	4801264	1	
22	RISER 2"	By Field	By Field	1	
23	BOLTS FOR METER 5/8" X 1.5" LONG	00362027	Meter Ops	8	
24	MACHINE BOLTS, 5/8" X 2.75" LONG WITH HEX NUT	00309303	6013701	32	FOR RI 4800373 FOR NUT AND 4800362 FOR STUD
25	METER 5M OR 7M TEMPERATURE CORRECTED	Meter Ops	Meter Ops	1	

DOORS, WINDOWS & GRAVITY AIR INLETS

SERVICE REGULATOR VENT RESTRICTIONS

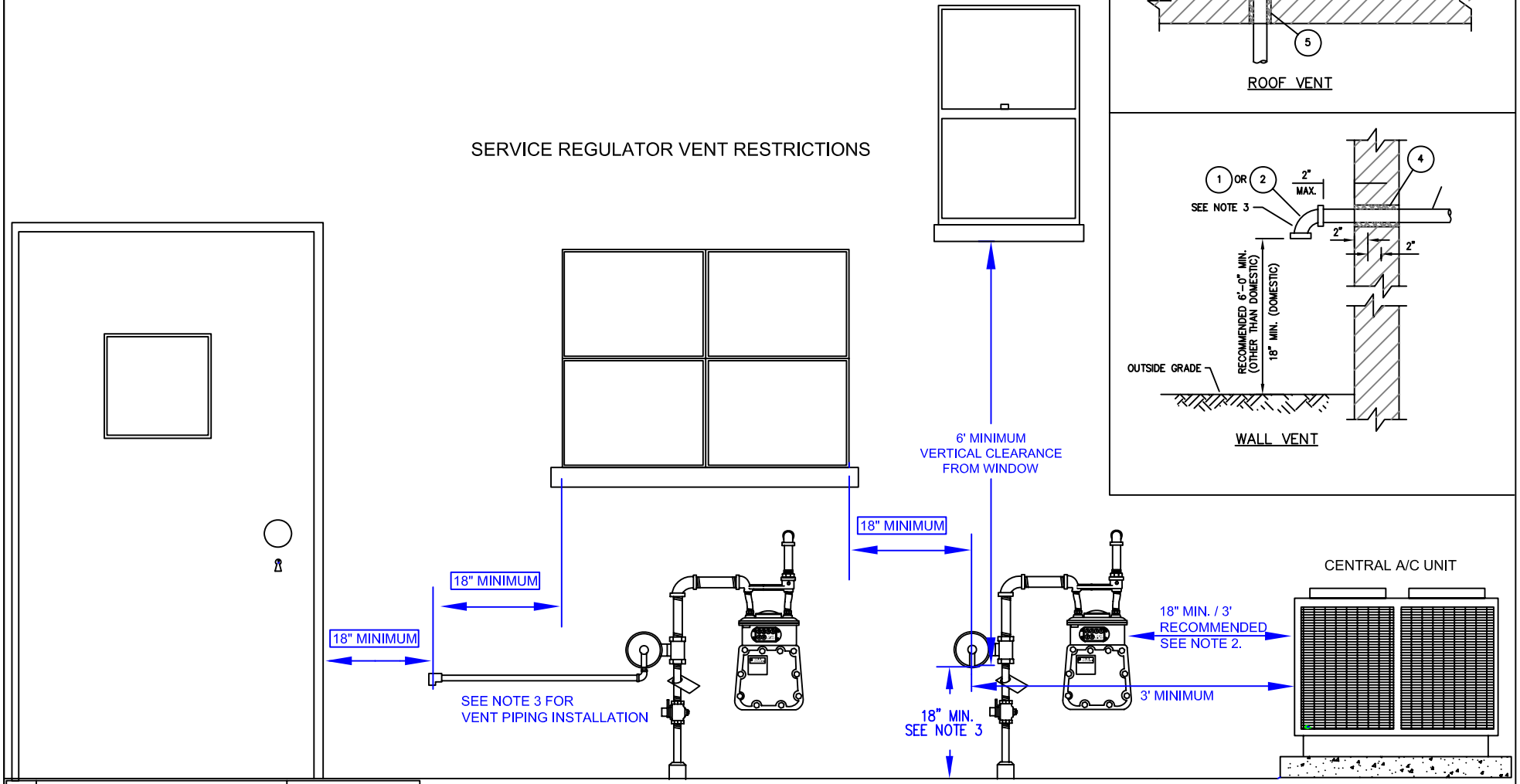

ROOF & WALL VENT DETAILS

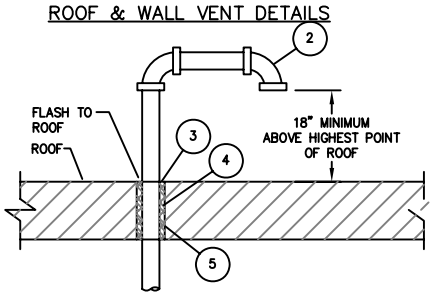

ROOF VENT

WALL VENT

#	ITEM	ITEM ID	
5	PIPE SLEEVE		——
4	YARN PACKING		00588012
3	SEALING COMPOUND		00126057
2	ELBOW WITH RAIN & INSECT RESISTANT SCREEN	1" 1-1/4" 1-1/2" 2"	00322596 00322595 00322587 00322606
1	VENT ASSEMBLY, WITH RAIN & INSECT RESISTANT SCREEN	3/4" 1" 1-1/4" 1-1/2" 2"	00786211 00786214 00786212 00786215 00786210

nationalgrid LI–NYC

OUTDOOR LOCATION FOR SERVICE RISER AND REGULATOR VENT TERMINUS

REVISIONS: ADDED NOTE 10: INDICATING THAT VENT PIPING SHALL NOT BE INSTALLED UNDERGROUND. COMBINED STANDARD WITH MTRS-6220-NY.

DATE: 07/01/2003
DESIGN: PAUL GUGLIOTTA
DRAWN: PAUL GUGLIOTTA

EFFECTIVE DATE: 12/10/2008

STD. DWG. NO. SERV-6225

LARGE COMMERCIAL & INDUSTRIAL INSTALLATIONS

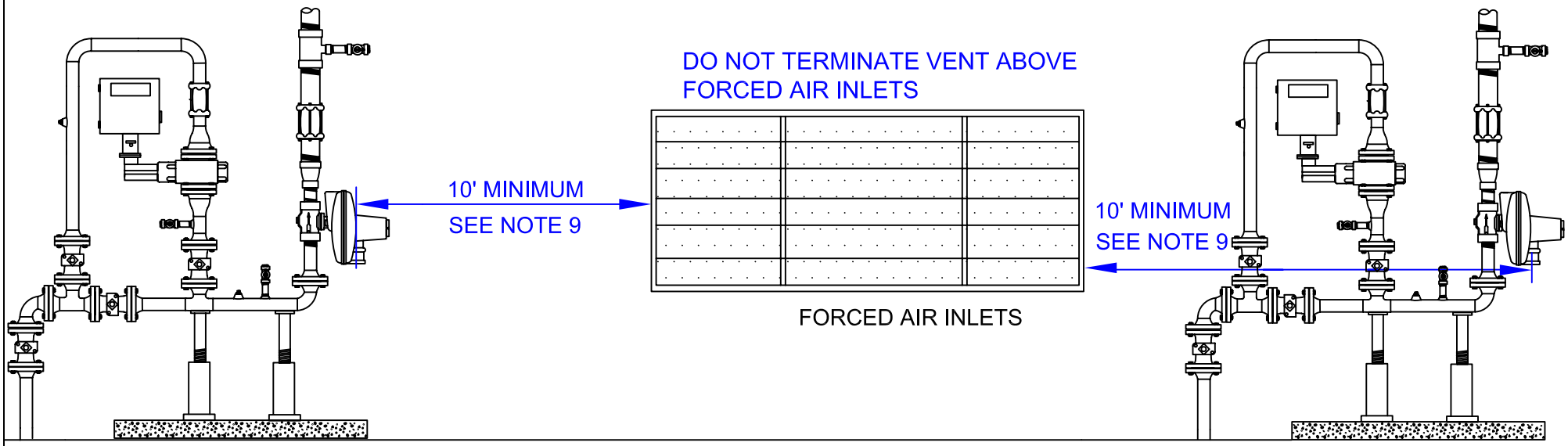

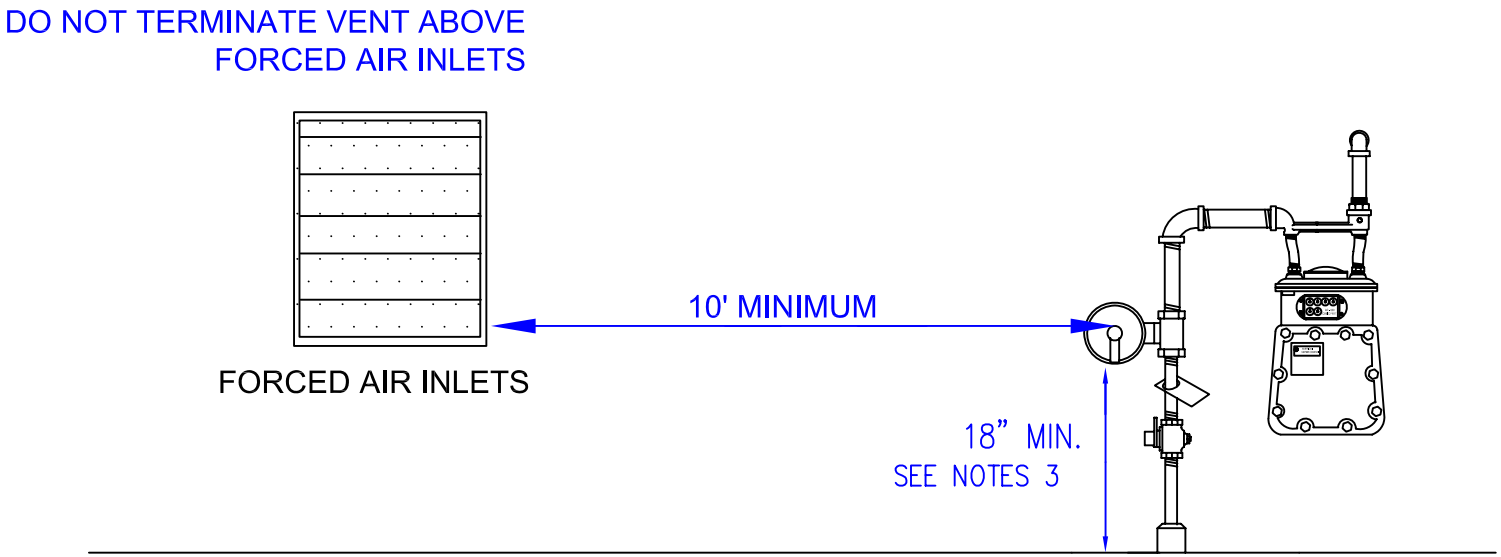

NOTES:

1. A VENT CANNOT BE LOCATED UNDER AN OVERHANG THAT CAN TRAP GAS SUCH AS A PITCHED AWNING WITH SIDES. A VENT MAY BE LOCATED UNDER A FLAT SURFACE HORIZONTAL OVERHANG UNDER 6' IN LENGTH AS LONG AS THE OVERHANG HAS NO OPENINGS INTO THE BUILDING WITHIN 18 INCHES OF THE VENT TERMINUS.

2. REGULATOR VENTS SHALL BE LOCATED AT LEAST 3 FT FROM SOURCES OF IGNITION. IT IS RECOMMENDED THAT GAS METERS BE LOCATED 3 FEET FROM SOURCES OF IGNITION; HOWEVER, A MINIMUM DISTANCE OF 18" IS REQUIRED.

3. THE OUTSIDE TERMINAL OF EACH SERVICE REGULATOR VENT MUST:

   - HAVE A RAIN AND INSECT RESISTANT SCREEN
   - BE LOCATED AT A PLACE WHERE ANY VENTING GAS CAN ESCAPE FREELY INTO ATMOSPHERE
   - BE AWAY FROM ANY WINDOWS, DOORS, SOFFIT VENTS OR ANY OPENINGS WHERE GAS CAN ENTER THE BUILDING. MAINTAIN A MINIMUM OF 18 INCHES HORIZONTAL CLEARANCE IF THAT OPENING IS WITHIN 6 FEET VERTICALLY OF THE VENT TERMINUS.
   - BE LOCATED A MINIMUM OF 18 INCHES ABOVE FINAL GRADE (*)
   - BE LOCATED A MINIMUM OF 18 INCHES ABOVE KNOWN FLOOD LEVELS
   - BE PROTECTED FROM DAMAGE WHERE ICE ACCUMULATION MAY OCCUR

   (*) ON ANY NEW SERVICES INSTALLED AFTER JUNE 10, 2007, 18" SHALL BE MAINTAINED FROM THE REGULATOR VENT TO GRADE. ON ANY RE-TUBE OR REGULATOR REPLACEMENTS, THE 18" CLEARANCE MUST ME ADHERED TO AS WELL. ALL PRE-EXISTING REGULATORS (INSTALLED BEFORE JUNE 10, 2007) MUST MAINTAIN A MINIMUM HEIGHT OF 14" FROM GRADE.

4. GAS METERS, REGULATORS AND VENTS MUST BE A MINIMUM OF 12" FROM A STANDARD ELECTRIC METER. STANDARD ELECTRIC METERS ARE NOT CONSIDERED A SOURCE OF IGNITION.

5. THE METER ASSEMBLY SHALL BE LOCATED TO PREVENT DAMAGE BY VEHICLES AND MECHANICAL EQUIPMENT. WHERE THIS IS NOT PRACTICAL, ADDITIONAL PROTECTION SHALL BE INSTALLED. SEE MTRS-6060.

6. GALVANIZED PIPE AND FITTINGS FOR VENT PIPING IS PREFERRED. PROPERLY COATED BLACK IRON PIPE IS PERMITTED.

7. IF A VENT NEEDS TO BE EXTENDED, STRAIGHT PIPING IS PREFERRED, BUT IF NOT PRACTICAL, A VENT LINE "TRAP" IS ACCEPTABLE.
   - ON OUTSIDE METER SETS, AN INSULATED UNION (LI) OR INSULATED COUPLING (NY) IS PREFERRED ON ALL VENT LINES UNDER 3' AND REQUIRED ON ALL VENT LINES > 3'.
   - ON **ALL** INSIDE SETS, AN INSULATING UNION OR INSULATED COUPLING IS REQUIRED ON THE VENT PIPING.

   THIS INSULATED UNION OR INSULATED COUPLING SHALL BE LOCATED AS CLOSE TO THE REGULATOR AS POSSIBLE.

8. IT IS PREFERRED THAT THE METER AND RISER NOT BE LOCATED UNDER A WINDOW.

9. ON LARGE RESIDENTIAL, COMMERCIAL & INDUSTRIAL SETS WHERE LARGE FORCED AIR INTAKE SYSTEMS ARE PRESENT, ENGINEERING APPROVAL IS REQUIRED FOR REGULATOR/RELIEF VALVE TERMINATION POINTS.

10 VENT LINES ARE NOT PERMITTED UNDERGROUND OR DIRECTLY ENCASED IN CONCRETE, ASPHALT, ETC.

CLEARANCE GUIDELINES:

Situation	Minimum Distance	Acceptable
Standard Electric Meter	12 inches from gas meter or regulator vent terminus	Y
Ignition Source	3 feet from gas meter or regulator vent terminus	Y
Window, Door, Soffit Vent, other Openings into building	18 inches Horizontal and 6 feet Vertical from regulator vent terminus	Y
Vent Terminus Under Flat Overhang	Protruding less than 6 feet	Y
Vent Terminus Under Flat Overhang	Protruding 6 or more feet	N
Central A/C Unit	3 feet from gas meter or regulator vent terminus	Y
Vent Terminus Under Awning/Canopy with sides enclosed	18 inches Horizontal	Y
Forced Air Intake large residential, commercial or industrial	Requires Engineering Approval	N/A
Vent Terminus Clearance above final grade	18 inches	Y
Vent Terminus Clearance above known flood line	18 inches	Y

No.	ITEM	CODE No.
	BILL OF MATERIAL	

FISHER S-102K WITH 9/16"X5/8" ORIFICE
230,000 BTU MAXIMUM OR

ACTARIS B-31R REGULATTOR WITH 1/2" ORIFICE
400,000 BTU MAXIMUM

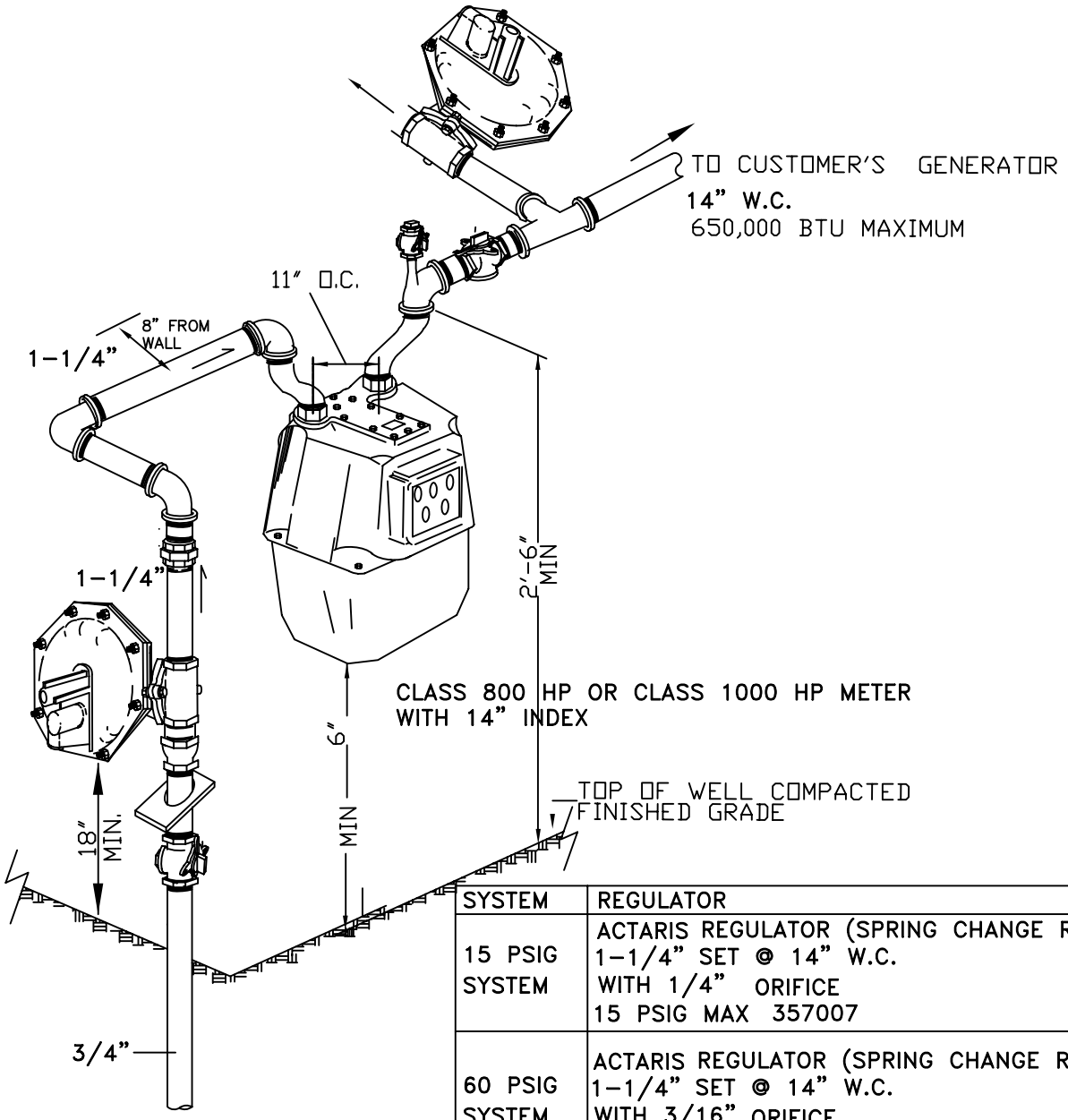

HIGH PRESSURE SERVICE

SYSTEM	REGULATOR
15 PSIG SYSTEM	ACTARIS REGULATOR (SPRING CHANGE REQ'D) 1-1/4" SET @ 14" W.C. WITH 1/4" ORIFICE 15 PSIG MAX 357007
60 PSIG SYSTEM	ACTARIS REGULATOR (SPRING CHANGE REQ'D) 1-1/4" SET @ 14" W.C. WITH 3/16" ORIFICE 60 PSIG MAX (ITEM ID 357519)
99/124 PSIG SYSTEM	ACTARIS REGULATOR (SPRING CHANGE REQ'D) 1-1/4" SET @ 14" W.C. WITH 1/8" ORIFICE 124 PSIG MAX (ITEM ID 357519)

REFERENCES

STD. DWGS. SPECS.

REVISIONS

nationalgrid LONG ISLAND & NEW YORK CITY

OUTDOOR METER SET – NO BYPASS
WITH GENERATOR CLASS 750/800/1000
425–1000 CFH – 15–124 PSIG SVCS

DATE: AUG. 18, 2003 | EFFECTIVE DATE: AUG. 18, 2003

DESIGN: PAUL GUGLIOTTA

DRAWN: PAUL GUGLIOTTA

STD. DWG.
NO. 000–000

Blue Book part 2

Temperature Controlled Specification

Requirements for installation of Automatic Dual Fuel Burners
and Equipment at Temperature Controlled (TC) Sites
and Straight Gas Utilization Equipment of 400,000 Btu/hr and Higher

nationalgrid
The power of action.℠

National Grid
Blue Book - Part 2
TC SPECIFICATION

Requirements for Installation of Automatic Dual Fuel Burners and Equipment at Temperature Controlled (TC) Sites

and

Straight Gas Utilization Equipment of 400,000 Btu/hr and Higher

National Grid
Blue Book - Part 2
TC SPECIFICATION

Requirements for Installation of Automatic Dual Fuel Burners and Equipment at Temperature Controlled (TC) Sites and Straight Gas Utilization Equipment of 400,000 Btu/hr and Higher

TABLE OF CONTENTS

16.0 Introduction and Scope for the Installation of Automatic Dual Fuel Burners and Equipment at Temperature Controlled (TC) Sites

17.0 Gas Service Metering, Piping and Available Pressures

18.0 Appliance Regulators, Gas Train Components and Gas Control Venting

19.0 Boiler Construction, Piping and Installation Requirements

20.0 Electrical Safety Requirements

21.0 Combustion Control, Required Safeties and Combustion Air

22.0 Limit Controls

23.0 Fuel Valves

24.0 Installation of M2M Fuel Selection/Meter Read Module for New York City and Long Island

25.0 Design and Control of Automatic Changeover Circuits

26.0 Co-generation, Process and Auxiliary Equipment

27.0 Propane as the Alternate Fuel

28.0 Gas Engines

29.0 Required Site Inspections, Burner Submittals and Start-Up

30.0 Installation of Straight Gas Utilization Equipment of 400,000 BTU/Hr and Higher

16.0 Introduction and Scope for the Installation of Automatic Dual Fuel Burners and Equipment at Temperature Controlled (TC) Sites

16.1 Introduction

The **National Grid Blue Book-Part 2, TC-Specification** is an update of the **TC-2005** Specification for Installation of Dual Fuel Automatic Temperature Controlled Burners and Equipment at Interruptible Sites in both New York City (Brooklyn, Staten Island, Queens) and Long Island (Nassau, Suffolk, Rockaways). Where installation requirements between New York City (NYC) and Long Island (LI) differ, the specific differences will be explained. **This document replaces and supersedes the KeySpan TC-2005 Specification.**

Burners intended for use under the National Grid Temperature Controlled Rate (Public Service Commission Service Classification No. 6 for New York City and No. 12 for Long Island) must be factory designed and built to this specification to operate automatically via a signal from the M2M outdoor temperature controller. The customer shall install the dual-fuel equipment necessary and at all times maintain a sufficient stand-by alternate fuel to utilize same in the event that transfer of fuel sources is required. A 10 day supply of #2 oil is required. Dual-fuel burners wired for manual (gas-off-oil) “Semi-Automatic” fuel changeover will not work automatically with the outdoor control and will only be accepted for this rate for facilities manned on a 24 hour per day, 7 day per week basis by personnel who are capable of switching to the alternate fuel when the outdoor control alarm sounds. It should be noted that in NYC the temperature setting of the "M2M Module” for “Semi-Automatic” control is normally set 5 degrees F higher than for automatic fuel changeover.

It is recognized that there may be different means of complying with the National Grid Temperature Controlled Rate Structure other than utilizing dual fuel equipment. Electrical diagrams detailing equipment and control wiring for the proposed method of complying with the rate requirements must be submitted to National Grid Engineering for design review and approval prior to installation at the site.

Burners and gas engines shall be designed to operate at gas inlet pressure levels as specified in Section **17** of this specification. All net gas pressures are nominal available pressures at the inlet to the gas train. The inlet reference to the gas train shall start with the first manual valve, upstream of the required appliance regulator.

All territories supplied by National Grid receive natural gas of approximately 1,000Btu/Ft^3 and a specific gravity of 0.6 delivered from either the low pressure or high pressure system. Where high gas pressure main can be made available to supply the load and where approved by National Grid Gas Engineering, a National Grid service regulator together with other components and vent lines are required to be installed at the site. In these cases, the National Grid service regulator setting will not normally exceed 3 psig in NYC and 5 psig in LI, and is normally set lower. The final setting will depend on the firing rate and total load of the equipment at the site. Prior to proceeding with the installation of a gas service off a high pressure main or booster elevated service off a low pressure main, installers must obtain the meter regulator/header or booster layout prepared by National Grid Gas Engineering. All questions regarding available gas pressure supply and meter layouts must be referred to the National Grid Project Manager for the location involved.

Confirmation of approval that a contract is acceptable and a gas supply is available must be obtained from Gas Sales and Marketing of NYC or LI before proceeding with a sale or installation of any equipment under this rate. Immediately upon receipt of this approval, a burner submittal package (as described in this specification) is to be mailed to National Grid Gas Sales-Dual Fuel Engineering. Burner wiring, control and gas train piping diagrams must be reviewed and approved by Dual Fuel Engineering prior to the ordering of any burner equipment for the site.

Installers are required to arrange for a preliminary site inspection with the appropriate National Grid Gas Sales Project Manager prior to bidding on a job

Contained in this document are references to specific manufacturer and equipment model numbers for the purpose of installation guidance in compliance with this specification. These references shall not be construed as an endorsement by National Grid of any product and/or manufacturer, as other compatible products may be accepted for use after review by National Grid Gas Sales-Dual Fuel Engineering.

Questions relating to the material contained herein should be directed to the appropriate person in National Grid Gas Sales & Marketing. Requests for exceptions to this specification must be submitted to National Grid for review and approval prior to starting work at the site.

National Grid reserves the right to revise this specification at any time without prior notice.

16.2 Scope

Sections **16** through **29** of the **National Grid Blue Book-Part 2, TC Specification** detail the requirements for the design, construction, control and installation of boilers, furnaces, dryers, ovens, water heaters, and absorption chiller **dual fuel applications** with a **single power burner** at commercial, industrial and governmental temperature controlled sites**.** These requirements also pertain to the control of combustion engines at such sites. Specific references for the design, construction and installation of combustion engines are contained within. Therefore, this specification details the requirements for **dual fuel applications** of a **single power burner** providing forced draft combustion for the utilization equipment specified unless specifically stated otherwise. Induced draft and natural draft burners will be approved on a site-specific basis after an engineering analysis is performed to assure that the induced or natural draft is adequate to provide pre-purge and post-purge air requirements. All equipment with multiple burners and other types of gas utilization equipment for applications not specifically mentioned herein will be reviewed for approval on a site-specific basis after an engineering analysis is performed.

All gas and oil utilization equipment must be installed per the manufacturer's recommendations and be built to comply with the applicable performance standard of The American National Standard Institute (ANSI). In some cases this may require that the supplied equipment be constructed and installed to standards more stringent than those contained in this specification however, the requirements of this specification must always be adhered to as the minimum standard for the equipment.

All burners, components and equipment must be listed by Underwriters Laboratory (UL), Factory Mutual (FM), CSA (IAS) International with US indicator, or other nationally recognized testing agency and must be approved by National Grid and as required by the City of New York or the local municipality having jurisdiction. Further, all boilers and pressure vessels require American Society of Mechanical Engineers (ASME) certification.

Where Factory Mutual (FM), Industrial Risk Insurers (IRI), or other carrier safety requirements govern customer's insurance coverage, these must be complied with, but in all cases the requirements of this specification must be adhered to as the minimum standard for equipment construction and installation.

All installations in NYC and LI shall comply with the most stringent and latest version of all applicable state, federal and local municipality codes, rules and regulations in addition to The New York State Industrial Code Rule 4 and 14 for Construction and Installation of High and Low Pressure Boilers. Public schools in NYC must conform to the standards of the School Construction Authority (SCA). New York City installations must further comply with The New York City Fuel Gas Code, Department of Air Resources Engineering Criteria for Fuel Burning Equipment and the New York City Administrative Code. Long Island installations must further comply with The Fuel Gas Code of New York State. Long Island propane installations must be built to conform to the standards of the LP-Gas Code NFPA58 and The Fuel Gas Code of New York State.

Equipment design, construction and function must conform to the requirements of the following applicable national standards; The National Fire Protection Association (NFPA) Standard for the Installation of Oil Burning Equipment NFPA 31, The American National Standard Institute (ANSI) for Gas Utilization Equipment in Large Boilers ANSI Z83.3 or Gas Fired Low Pressure Steam and Hot Water Boilers ANSI Z21.13, Standard for Single Burner Boiler Operation NFPA85, The American Society of Mechanical Engineers (ASME) Controls and Safety Devices for Automatically Fired Boilers ASME-CSD-1, Underwriters Laboratory Commercial & Industrial Standards UL795 for gas burners and UL296 (ANSI Z96.2) for oil burners, Standard for the Installation and use of Stationary Combustion Engines and Gas Turbines NFPA37, Standard for Oven and Furnaces NFPA86.

17.0 Gas Service Metering, Piping and Available Pressures

17.1 General

Customer shall submit a gas load letter to Gas sales and Marketing for review and processing. The load letter shall detail the manufacturer, model number, firing rate, pressure required and service classification of all equipment proposed to be installed at the site. Gas Engineering will analyze the request to determine the impact of the additional load on the National Grid system and determine if the new load can be supplied by high pressure service, low pressure service or low pressure service with a booster.

17.2 Main Gas to the Burner

Metering equipment and associated house piping for a commercial, industrial or

governmental location shall be installed in accordance with The New York City Fuel Gas Code for NYC, The Fuel Gas Code of New York State for LI, the local municipality having jurisdiction and National Grid requirements as detailed in **The National Grid Blue Book-Part 1.** A separate meter will be supplied for the Automatic and Semi-Automatic Temperature Controlled Rate, Public Service Commission Service Classification No. 6 for New York City and No. 12 for Long Island. Only the equipment approved for this rate classification shall be supplied from the Interruptible Temperature Controlled Rate meter. For a general guide of supplied pressure according to firing rate, the design parameters listed in this section can be utilized in determining the approximate inlet pressure that will be available. In order to insure that installations will operate in a satisfactory manner, the customer's equipment must be matched to National grid service and metering equipment.

17.2.1 Large Gas Inputs

It should be noted that some appliance gas pressure regulators (particularly pilot-operated regulators) require substantial gas pressure for operation. National Grid will supply higher pressures above 7”w.c. as described in Section **17.3, 17.5** and Table 1, only where manufacturer's data is received to warrant the higher pressure requirement. This information includes; required burner manifold pressure, expected furnace back pressure, firing rate, model and catalog number of the appliance regulator to be used, and the pressures required before and after the appliance regulator.

Table 1

DESIGN & OPERATING RANGE FOR BURNERS ON HIGH PRESSUE SYSTEM

Firing Rate	Nominal Pressure Available at Inlet to Train	Maximum Pressure Drop In House Piping	Pressure Out of Meter	Pressure Drop in Meter	National Grid Regulator Max. Set Point
Up To 4,500 chf	6.2” w.c.	0.3” w.c.	6.5” w.c.	0.5” w.c.	7” w.c.
4,501 cfh to 6300 cfh	11.5” w.c.	0.5” w.c.	12.0” w.c.	2.0” w.c.	14” w.c.
6,301 to 8,400 cfh	23” w.c.	3.0” w.c.	26.0” w.c.	2.0” w.c.	1 psig
8,401 to 12,000 cfh	48” w.c.	6.0” w.c.	54.0” w.c.	2.0” w.c.	2 psig
12,001 to 22,000 cfh	73” w.c.	9.0” w.c.	82.0” w.c.	2.0” w.c.	3 psig

Notes:
1. Burners over 22,000 CFH require special pressure considerations.

2. The maximum pressure drops shown are for the upper range of burner firing rates. Where burner equipment requires less pressure than specified the pressure drop in the house piping will be less.

3. These are general guidelines for equipment with the indicated firing rates. Where manufacturers/contractor's burner and house piping requirements differ, the National Grid regulator setting will be adjusted.

17.3 High Pressure Service

Where a high pressure gas main is available and where approved by National Grid Gas Engineering, a National Grid service regulator together with other components and vent lines is required to be installed by the customer/contractor. The National Grid service regulator setting will normally be 7" w.c. unless manufacturer's data is received to warrant higher pressure. Generally, the service regulator setting will not exceed 3 psig in NYC and 5 psig in LI and its final setting will depend on the total load at the site. In NYC where pressure of more than 3 psig is required to fire the burner, special permission must be obtained from the Commissioner of Buildings as per NYC Administrative Code Reference Standard RS-16. In LI where pressure of more than 5 psig is required to fire the burner, the requirements of the local municipality must be followed.

Before proceeding on a high pressure gas service installation, installers must obtain the meter regulator/header layout prepared by National Grid Gas Engineering. All questions regarding available gas pressure must be referred to the National Grid Project Manager for the location involved.

17.3.1 Low Gas Pressure Changeover Switch. (Required at TC sites with gas service off high pressure mains)

A low gas pressure changeover switch will be provided by National Grid and shall be installed on one burner gas train with a ¾" welded fitting and piped with a valve and test connection. This switch must be wired to the outdoor control circuit in a manner specified by National Grid Dual Fuel Engineering. National Grid shall provide the wiring schematic and piping/valve arrangement necessary for proper installation. This switch must immediately initiate the automatic changeover to the alternate fuel as detailed in this specification.

17.4 Low Pressure Service

Services off the low pressure distribution system do not require a National Grid service regulator. National Grid provides gas to customers where the meter outlet pressure measured immediately downstream of the gas meter can vary between 4" and 6"w.c. When purchasing gas utilization equipment to operate on the low pressure system it is recommended that the equipment chosen require no more than 3.5" w.c. pressure at the burner head. Also, the house piping shall be so designed for a maximum of 0.2" w.c. pressure drop in piping from the meter to the equipment. Burners being supplied off the low pressure distribution system without a booster will normally have a maximum input of 4,500 CFH.

17.5 Gas Booster off Low Pressure Services

Normally, burners with input requirements over 4,500 CFH and/or pressure requirements

higher than 6”w.c. will require a gas booster where high pressure main is not available. Typical booster types are Eclipse, Spenser and Etter Engineering. Depending on the location of the site within the National Grid system an exception to booster use may be made for burner firing rates as high as 5,000 CFH where high flow gas train design and components are utilized to minimize pressure drop.

17.5.1 General

1. In all cases, National Grid Gas Engineering determines which system (low or high pressure mains) will provide gas for the approved load and the supply pressure. Where burners require gas pressures higher than that available on the low pressure main a gas booster may be utilized but only as provided in these specifications.

2. Only one gas booster per gas service is allowed. National Grid must approve exceptions to this on a site by site basis.

3. National Grid Gas Engineering must review all gas booster applications, and proposed booster locations before installation. Once reviewed and approved National Grid will determine whether we will provide the booster or whether the customer must supply the required gas booster.

4. Loads that exceed 10,000 CFH may not be able to be supplied off the low pressure system. Exceptions can be made depending on the site location within the low pressure network; however, gas availability for large loads must be verified prior to the ordering of equipment.

5. Before proceeding on a booster gas service installation, installers must obtain the meter and booster layout prepared by National Grid Gas Engineering. All questions must be referred to the National Grid Project Manager for the location involved.

6. The total pressure required must include the drop in the house piping sized in accordance with The New York City Fuel Gas Code for NYC, The Fuel Gas Code of New York State for LI plus the manufacturer’s stated gas pressure requirement for the appliance(s).

7. Gas boosters shall be hermetically sealed, such as the type manufactured by the Eclipse, Inc., Spencer Turbine Company, Etter Engineering or other approved equal.

8. Gas boosters shall be installed after the meter and bolted on a firm foundation or concrete floor with isolation pads to avoid vibration. The booster shall be located for proper maintenance access and such that sufficient air, for cooling, is allowed to circulate about the unit and shall not be located in confined spaces. At certain sites, a booster by-pass heat exchanger may be required to dissipate heat during extended low flow equipment operating conditions.

17.5.2 Gas Booster Wiring

1. After review of the required submittal package, National Grid Dual Fuel Engineering will supply diagrams showing the suggested wiring for interlocking the booster control circuits. Gas boosters shall be wired into the burner operating circuits such that they will run only when the burner is firing on gas, and shall not run during the burner off period or when the alternate fuel is being utilized. For sites with multiple burners, isolating relays are required for booster control.

2. All gas boosters shall be installed with a customer supplied magnetic motor starter with motor overloads and a disconnect switch. The disconnect switch shall be at the booster location.

3. When National Grid provides the booster we will also provide a general purpose low gas pressure switch. When we do not provide the booster the customer will need to provide the booster low pressure shutdown switch. The switch is to be connected in series with the booster motor starter coil. In situations where the meter room is classified as a Class 1 Hazardous Area requiring explosion proof equipment, the low gas pressure switch must be located in an appropriate location outside the meter room. When this is not practical and it must be located inside the room, if National Grid is providing the booster we will supply an explosion proof switch. Additionally, if the low gas pressure switch is the only general purpose device that will be located inside the meter room, that meter room must be treated as a Class 1 Hazardous Area.

4. The National Grid low or customer supplied low gas pressure switch is independent of the low gas pressure switch supplied on the burner gas train. If the gas booster motor stops or loses the pressure boost, the burners must shut down. The low gas pressure switch on the burner train must be adequate in range and setting to insure such burner shutdown as under firing is not permitted. Therefore all equipment supplied by a booster regardless of the firing rate must be equipped with a low gas pressure switch on the gas train.

17.5.3 Gas Booster Piping

1. The booster shall not supply pilot gas.

2. Booster lines 4" pipe size and larger operating at 14” w.c. or above must be butt welded.

3. The maximum test pressure permitted for a booster is 3 psig. If test pressures higher than 3 psig are required on the house piping, the booster must be isolated from the piping to be tested.

4. The low gas pressure switch whether supplied by National Grid or the customer, is to be installed at the service entrance on a 1" weldolet or welded tee to accommodate the switch. National Grid does not wire or pipe this low gas pressure switch.

17.6 Gas Boosters off High Pressure Services

Here, "Gas Booster" is only a relative term. The above section involves gas pressure boosters on the low pressure system. Boosting gas pressure where the entry gas pressure is elevated above 6” w.c. involves compression ratios and entails engineering consideration and design on the part of the customer as well as special permission from the company. This type equipment is not provided by National Grid and is normally applicable to Commercial-Industrial occupancies and requires the approval of the Local Municipality or the City of New York.

Some items in the above section for boosters off low-pressure services (such as hermetically sealed units) may also apply to these gas compressors. However, where the compressors are permitted, there may be additional requirements and safety controls, depending on the size, occupancy, location and arrangement of the proposed equipment. Where compression ratios are substantial, expansion tanks and other specialized control systems may also be applicable. Such equipment assemblies must follow accepted installation practices and standards and codes.

17.7 Pilot Gas Piping to the Burner

On Temperature Controlled Installations, all pilot gas is to be supplied by a Firm Rate low pressure meter. If the alternate fuel is to be ignited by direct spark ignition (see Section **21.10**) or the requirement for a Firm Rate gas pilot is deemed by National Grid to be impractical, on a site specific basis, special permission may be given to take pilot gas from the TC Rate gas meter.

18.0 Appliance Regulators, Gas Train Components and Gas Control Venting

18.1 Appliance Regulators

All burners shall be equipped with a gas pressure regulator on the pilot line and an appliance regulator on the main gas train. The National Grid service regulator may not be utilized as the appliance regulator. All regulators must comply with the applicable requirements of ANSI Z21.18 and/or ANSI Z21.80.

18.1.2 General

Sheet 1 details typical and alternate gas train layouts for main and pilot gas. The burner gas train shall be installed in a horizontal or vertical (when allowed by the manufacturer) line in the front of or, for large gas trains, on the side of the boiler and shall not interfere with the servicing of the burner. A sediment trap shall be incorporated into the main gas train if not supplied with the burner.

1. The appliance and pilot regulator shall be rated for the flow and operating pressure requirements for the burner. The regulator spring is not to be bottomed-out or set too low. All such springs should regulate in the active portion of their operating characteristic curve. Regulators must be adjusted for proper flame characteristics and smooth operation of gas burner trains for the full firing range of the burner.

2. On elevated pressure systems of over 14"w.c., all regulators must be vented outside the building to atmosphere. On services supplying 14"w.c. and less, regulators with valve bodies *1-1/4"* and larger must be vented outside the building to atmosphere. Regulators with valve bodies smaller than 1-1/4" and those installed on services supplying 14"w.c. and less may be equipped with approved appliance vent limiters in lieu of outside venting. The Siemens SKP series of combination valve/regulator (with integral vent limiter) or approved equal may be utilized for their rated pressures and body sizes without outside venting when installed as per this specification.

3. Pilot regulators that conform to the size and pressure limits as detailed in Item 2 above may be installed with approved vent limiters in lieu of outside venting.

4. Vents are to be a minimum 3/4" pipe size, but in all cases shall be of sufficient size to prevent the restriction of flow due to backpressure. The Vent line from the normally open vent valve (NOVV) is not to be connected into a common header with the gas train regulator vents or other NOVV's. Gas train high and low gas pressure switch vent lines may be connected to the regulator vent lines. All appliance vents are to terminate a minimum of six feet above outside grade at least 18" laterally from any building opening, window or door and shall be equipped with weatherproof insect resistant vent caps or fittings. Vent line sizing for gas pressure regulators, in relation to length of run, shall be in accordance with Table 2, the number of 90 deg. bends should be minimized.

5. For two or more burners operating off the **same service and pressure**, installers may manifold atmospheric vent lines for regulators and pressure switches into a common header. Vent lines off normally open vent valves are <u>not</u> to be connected to other type vent lines or manifolded into a common header. Bleed lines off regulator/diaphragm gas valves are <u>not</u> to be manifolded into a common header. Manifolded atmospheric vent lines must be connected to a common vent line having a cross sectional area not less than the area of the largest vent plus 50 percent of the combined area of all the additional vents with allowance for length of run and fittings.

6. Vent Sizing table for regulators.

Table 2
Regulator Vent Lines

Vent Line Size (Inches)	Maximum Length (Equivalent Feet)
¾	40
1	80
1¼	150
1½	225

SHEET 1

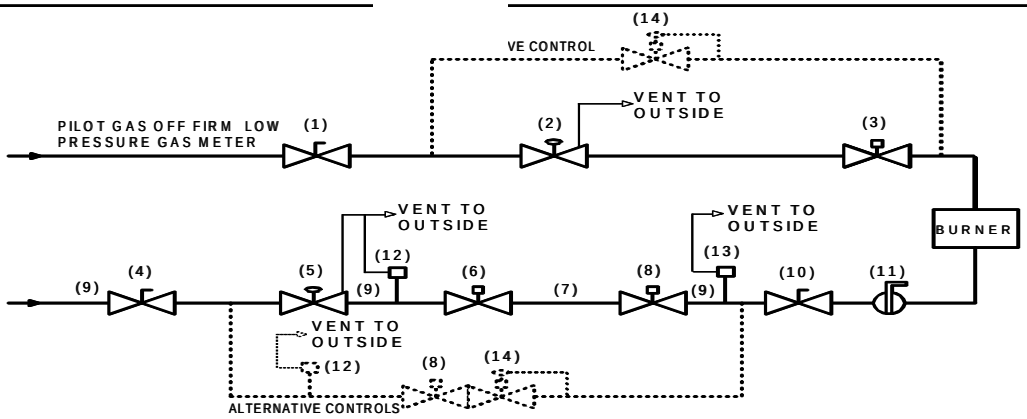

COMPONENTS	PIPE SIZE	MANUFACTURER AND MODEL NO.
(1) PILOT COCK		
(2) PILOT PRESSURE REGULATOR		
(3) PILOT SOLENOID ELECTRIC VALVE		
(4) LUBRICATED PLUG COCK		
(5) PRESSURE REGULATOR		
(6) SAFETY SHUTOFF VALVE		
(7) GAUGE CONNECTION (PLUGGED)		
(8) SAFETY SHUTOFF VALVE (P.O.C. VALVE)		
(9) GAUGE CONNECTION (PLUGGED)		
(10) CHECKING COCK		
(11) FIRING RATE VALVE		
(12) LOW GAS PRESSURE SWITCH		
(13) HIGH GAS PRESSURE SWITCH		
(14) SAFETY SHUTOFF VALVE WITH PRESSURE REGULATOR		
(15)		
(16)		
(17)		

ARCHITECT

ENGINEER

CONTRACTOR

PROJECT

TYPICAL BURNER GAS TRAIN (ILLUSTRATIVE)

18.1.3 Combination Regulator/Diaphragm Gas Valves

Combination regulator/diaphragm gas valves such as the Honeywell V4943 or equal may be used on burners with inputs under 2,500,000Btu/Hr. When used on elevated pressure services of over 14"w.c. they must be vented outside the building to atmosphere.. On services supplying 14"w.c. and less, combination regulator/diaphragm gas valves with bodies *1-1/4"* and larger must be vented outside the building to atmosphere. Bleed lines off regulator/diaphragm gas valves are not to be manifolded into a common header. Those with valve bodies smaller than 1-1/4" installed on services supplying 14"w.c. and less may be equipped with an approved vent limiter in lieu of outside venting.

18.1.4 Ventless Appliance Regulators

For all body sizes and rated range of operating pressures, the Siemens SKP2/5/7 regulators (with integral vent limiter) or approved equal are accepted by National Grid as not needing to be vented to the outside when used with a high gas pressure switch installed downstream of the regulator. The high gas pressure switch is to be set at a maximum of 150% of measured pressure at high fire and must initiate a safety shutdown should gas pressure exceed that limit. Here the term "Ventless" is used relative to alleviating the requirement for outside venting; however, the SKP2/5/7 regulators must be equipped with overpressure protection in lieu of the requirement for outside venting. Furthermore, the downstream control line for the regulator must be a minimum ¼" pipe or ¼" ID stainless steel tubing utilizing compression fittings connected to a welded tap or tee fitting a sufficient distance downstream as specified by the manufacturer. See **Sheet 1** for alternate gas train layout.

18.2 Gas Train High & Low Gas Pressure Switch Venting

Pressure switches must be vented to atmosphere (outside the building) and may be connected to the appliance regulator vent on the same gas train. Cross manifolding between burners is allowed on equipment operating **off the same service and pressure**. Manifolded atmospheric vent lines must be connected to a common vent line having a cross sectional area not less than the area of the largest vent plus 50 percent of the combined area of all the additional vents with allowance for length of run and fittings.

18.2.1 Ventless Gas Train High & Low Gas Pressure Switches

Here the term "Ventless" is used relative to alleviating the requirement for outside venting; however, pressure switches in this category must be UL353 listed and must be equipped with an integral vent limiter in lieu of the requirement for outside venting. National Grid has accepted the following pressure switches or their equal as being "Ventless":

1. Antunes series LGP-G, HGP-G
   Note: LGP-A and HGP-A require outside venting
2. Honeywell series C6097
3. Karl Dungs series GMH, GML
4. Siemens series QPH, QPL

18.3 Normally Open Vent Valve (NOVV)

Where a NOVV is installed between the two main gas valves, the vent valve piping must be run outside the building to atmosphere separately from the regulator vent, pressure switch vent and all other NOVV lines. Based on site conditions, it may be required for the NOVV piping to be terminated above roof level to allow better dissipation of vented gas. Vent lines and associated full port NOVV's shall be sized in accordance with UL Standard 795 (Table 3) as a minimum. For Siemens series VG valve bodies, the valve body size shall be considered as the fuel line for sizing of the NOVV vent line. Requirements of applicable insurance carriers for sizing vent lines in relation to length of run must also be adhered to.

Table 3

NOVV Vent Line Sizing

Fuel Line Size (Inches)	Vent Line Size (Inches)
Up to 1½	¾
2	1
2 ½	1 ¼
3	1 ¼
4	2
5	2
6	2 ½
8	3

18.4 Inspection

All house piping, regulator, safety and relief device vent piping must be inspected prior to start up and tested according to existing National Grid Standard Operating Procedures and according to the rules and regulations of New York State Department of Public Service, Part 255 for Service Regulators and Vents.

19.0 Boiler Construction, Piping and Installation Requirements

All boilers in NYC and LI and the associated piping must be constructed and installed to The American Society of Mechanical Engineers (ASME) standards for pressure vessels and must have ASME certification. They shall also comply with the most stringent and latest version of all applicable state, federal and local municipality codes, rules and regulations in addition to The New York State Industrial Code Rule 4 and 14 for Construction and Installation of High and Low Pressure Boilers. New York City installations must further comply with The Department of Air Resources Engineering Criteria for Fuel Burning Equipment and The New York City Administrative Code

19.1 Combustion Chambers and Burners on New Boilers

New York State Industrial Code Rule 4 and 14 require ASME certification of the boiler vessel and UL listing of the burner. The burner design shall be engineered to match the specific boiler combustion chamber for which it is to be installed and shall follow the manufacturer's recommendations. When using oil as the alternate fuel, burners are to be designed to prevent coking of the oil nozzles during oil or gas operation.

19.1.2 Replacement Burners Installed into Existing Boiler Combustion Chambers

New York State Industrial Code Rule 4 and 14 require ASME certification of the boiler vessel and UL listing of the burner. The retrofit of a new burner into an existing boiler must be performed by a qualified service provider utilizing a UL listed burner. 'Qualified' means that they have the experience and engineering know-how to match the burner to the application and provide the correct firing tube components for proper flame geometry within the boiler.

19.2 Oil Piping to the burner

All piping, fittings and tubing must be new materials properly threaded, welded and pitched. Tubing must be free of kinks and other defects. In locations where piping is liable to damage, it should be properly protected.

19.2.1 Two Pipe System

A two-pipe system shall be installed on all burner installations. Suitable suction and return line sizes shall be used depending on the length of run, height of lift, and the permissible suction and return pressures of the pump. The burner manufacturer recommendations shall be followed on all installations.

19.2.2 Suction Lines

Suction lines are to be equipped with oil filters which shall be of the non-cartridge, self-cleaning type such as the Cuno-Auto-Klean or equal. A gate valve shall be installed on the tank side of the filter and a check valve in the return line to the tank. Provision shall be made for the installation of a pressure gauge on the discharge side of the pump.

19.3 Steam Piping

All pressure controls and gauges on steam boilers shall be installed with siphon traps or pigtails. Manual shutoff valves shall not be allowed between the boiler and any limit controls.

19.4 Burner Pits

Where burners are to be installed in pits, consideration must be given to the servicing of the equipment. As a guide, the following minimum dimensions shall be followed:

Width - As required for the maximum width of the boiler

Depth - As required by manufacturer for centerline and configuration of the burner
Length - 24" clearance or manufacturers required distance from end of burner

All pit installations should have provisions for drainage. Where natural drainage is not available, an automatic sump pump shall be provided to prevent flooding of the burner equipment.

19.5 Conversions from Oil to Dual Fuel

1. Boilers
   Boiler heating surfaces and flue-ways shall be wire-brushed and vacuum cleaned to remove fly ash and carbon deposits. They shall be inspected thoroughly for leaks and repaired where required. The operation and rating of relief valves shall be checked to insure proper operation and sufficient size. Low water cutoffs shall be thoroughly cleaned out and tested. Boilers shall be blown down and return lines cleared of sedimentation.

1. Combustion Chamber
   Inspect condition and dimensions to determine if it can be used. Replace, rebuild, or repair where necessary.

2. Chimney
   Clean chimney and drop leg. Check for proper entrance of breeching and inspect for blockage.

3. Oil Tanks
   Tanks previously used to store oil other than #2 oil must be cleaned thoroughly to the metal. Leaking tanks shall be replaced, repaired or relined in accordance with all applicable Federal, State and Local requirements including however not limited to 40 CFR 280, 40 CFR 112, FDNY, NYCDEP, 6 NYCRR 613/614, Nassau County DOH & Suffolk County DOH requirements. Oil lines not replaced due to capacity/size requirements or condition shall also be cleaned. All waste generated as a result of the aforementioned shall be handled, transported, treated and disposed of in accordance with all Federal, State and Local requirements. Contractors shall comply with all worker safety and right-to-know rules and regulations as described by applicable OSHA standards.

4. Dampers
   All non-automatic flue dampers which cannot be conveniently removed or which are used in controlling draft, shall be provided with means to securely lock the dampers in the full fixed open or partially open position.

5. Oil Pre-heaters
   Electric and steam coil Oil pre-heaters must be disconnected and removed.

6. Oil Pumps and Compressors
   All oil pumps and compressors required for the burner to properly run on oil must be wired to start and stop automatically via the fuel changeover relays.

19.6 Oil Burner Safeties

Oil safeties and features must be fully operational and functional to comply with all applicable codes and standards as detailed in Section **21.11**. Additionally, oil burners in NYC firing 20 GPH or higher are to be equipped with a manual reset smoke opacity alarm wired to shutdown the burner when tripped.

19.7 Permits

The installing contractor shall obtain all permits necessary to complete an approved installation. The contractor must secure operating and fuel storage permits for all the required work.

19.8 Start-Up

1. The installing contractor shall notify the National Grid Project Manager when work is planned to start. At least one week prior to a start-up, National Grid shall be requested to inspect the installation. If burner corrections are required, it shall be the contractor's responsibility to have a service representative of the burner manufacturer present at the time of start-up.

2. In order to supply gas, the National Grid Gas Sales Technician will check that wiring, controls and draft follow applicable standards and approved drawings. They will also check and document products of combustion. The contractor must provide all test equipment to provide readings for draft, carbon monoxide, temperature, smoke and oxygen.

20.0 Electrical Safety Requirements

These requirements are issued in the interest of providing enhancement of electrical safety at the site for personnel who routinely perform equipment start-up, maintenance, electrical testing and troubleshooting of equipment in boiler rooms, air conditioning or machinery rooms.

Installation shall be built to the electrical requirements of the National Electric Code (NFPA 70) and other applicable federal, state and local municipality codes, ordinances and good practice standards relating to electrical and mechanical safety. Installations in NYC must adhere to the requirements of the New York City Electrical Code. This specification details the requirement for warning labels, exposed multi-tap transformer terminals and accessibility to and clearances from electrical switchgear and control circuit panels.

1. The electrical supply to the control system shall be a 2-wire, 120 Volt AC, 60 Hz circuit, with a grounded neutral. All switching is to be accomplished in the hot wire.

2. All wiring shall be color-coded. In all cases, black shall be used for hot, white for neutral, and green for ground. The same color code shall be used throughout the circuit.

3. Where remote oil pump sets are employed, a manual disconnect switch shall be provided at the pump location.

4. The control circuit is to be provided with overload protection not exceeding 15 amps.

5. Warning Labels -A hazardous voltage warning label shall be installed on the front cover of all burner control panels where the operating voltage is 120 volts or greater.

6. Multi-Tap Transformer Terminals (CAUTION)-Where multi-tap control transformers are provided in burner control panels, all exposed terminals shall be effectively shielded from accidental contact by personnel either with a non-conducting protective cover or with insulating heat-shrink tubing. When not provided for by the equipment manufacturer, contractor is to provide this protection prior to start-up of the equipment.

7. Minimum Clearances-The provisions of Article 110 of the latest edition of the National Electrical Code, NFPA 70, shall be followed with regard to minimum clearances in front of and around panels for various voltage levels.

8. Minimum Heights-Any control panel which is not an integral part of the equipment that it serves shall be mounted clear of the floor in accordance with accepted good practice standards for such items. However, all such panels shall be mounted a minimum of 18 inches above the finished floor as measured from the bottom surface of the panel enclosure.

21.0 Combustion Control, Required Safeties and Combustion Air

This section details National grid operating and safety requirements for new dual fuel burners based on firing rate. **Section 30** details requirements for straight gas burners. To comply with a manufacturer's requirements, the supplied equipment may need to be constructed and installed to standards more stringent than those contained in this specification. In these cases, the manufacturers published requirements must be followed; however, the requirements of this specification must always be adhered to as a minimum standard for the equipment.

It should be noted that manufacture and installation date(s) are considered during review of the electrical and mechanical diagrams that detail the operating features of on-site equipment. When safety is not compromised, National Grid may allow exceptions to some aspects of this specification, based on the age of the equipment (i.e., "grandfathering"). Therefore, whenever safe and practical, National Grid will evaluate the equipment relative to the temperature controlled specification in effect at the date of manufacture and installation at the facility. Upon request, a field inspection by National Grid Dual Fuel Engineering can be made for an on-site evaluation of the equipment and features.

21.1 Burner Operating Modes Based on Firing Rate

These are the **minimum** requirements for control and operation of burners.

21.1.1 Burners with inputs of 400 CFH to under 2,500 CFH

1. "On-Off" burner control

2. Fixed open dampers

21.1.2 Burners with inputs of 2,500 CFH to under 6,300 CFH

1. "Low-High-Off" or "Low-High-Low-Off" operation

2. Air damper drive motor and controls to provide and prove high fire purge via input from a damper mounted switch

3. Two-stage motorized gas valve actuator with air damper drive such as the Honeywell V4062 or equal and controls to provide and prove low fire start

4. Regulating oil valve with air damper drive and controls to provide and prove low fire start

21.1.2.1 Exception for New York City

In NYC "Low-High-Off" burner operation may be used for oil firing rates of under 30 GPH or 4,200,000 Btu/Hr. Burners in NYC operating from 4,200,000 Btu/Hr to under 6,300,00 Btu/Hr must use "Low-High-Low-Off" operation as a minimum.

21.1.3 Burners with inputs of 6,300 CFH to under 12,500 CFH

1. "Full Modulation" operation such that burner will not be in high fire at time of normal operating limit shutdown

2. Modulating drive motor and controls to provide and prove high fire purge via input from a damper mounted switch

3. Modulating drive motor and controls to provide and prove low fire start on gas and oil and "full modulation" control of;

   a) Gas butterfly valve
   b) Variable firing rate oil valve
   c) Air damper(s)
   d) FGR damper(s)

4. As an alternate to the modulating motor drive a computerized fuel-air ratio controller may be used as described in Section **21.2**

21.1.4 Burners with inputs of 12,500 CFH and Under 22,000 CFH

1. "Full Modulation" operation with low fire shutdown such that burner will be in low fire for normal operating limit shutdown.

2. Modulating drive motor and controls to provide and prove high fire purge via input from a damper mounted switch.

3. Modulating drive motor and controls to provide and prove low fire start on gas and oil and "full modulation" control of;

   a) Gas butterfly valve
   b) Variable firing rate oil valve
   c) Air damper(s)
   d) FGR damper(s)

4. As an alternate to the modulating motor drive a computerized fuel-air ratio controller may be used as described in Section **21.2**.

5. For multiple boiler installations (two or more) with burner gas trains operating at this range of inputs, should simultaneous normal operating shutdown or shutdown for fuel changeover cause nuisance tripping of National grid service overpressure protection, shutdown will be required to be staggered to prevent the nuisance trip. This may be accomplished using time delays or building management system controls. The wiring and design of the proposed staggered shutdown method must be submitted to National Grid Dual Fuel Engineering for review and approval.

21.1.5 Burners with inputs of 22,000 CFH and Higher

1. "Full Modulation" operation with low fire shutdown such that burner will be in low fire for normal operating limit shutdown and fuel changeover scenarios.

2. Modulating drive motor and controls to provide and prove high fire purge via input from a damper mounted switch.

3. Modulating drive motor and controls to provide and prove low fire start on gas and oil and "full modulation" control of;

   a) Gas butterfly valve
   b) Variable firing rate oil valve
   c) Air damper(s)
   d) FGR damper(s)

4. As an alternate to the modulating motor drive a computerized fuel-air ratio controller may be used as described in Section **21.2**.

5. For multiple boiler installations (two or more boilers) with burner gas trains operating 22,000 each or higher, start-up, normal operating shutdown and fuel changeover must be staggered using suitable time delay relays or building management system control to prevent nuisance tripping of National grid service overpressure protection. The wiring and design of the proposed staggered shutdown method must be submitted to National Grid Dual Fuel Engineering for review and approval

21.2 Fuel-Air Ratio Controller as an Alternate to the Modulating Motor

As an alternate to using a modulating motor to provide "full modulation" a computerized fuel-air ratio controller may be used when installed as per this specification. These linkage-less systems control individual motors mechanically linked to the firing rate valves and air dampers. The system software and hardware to monitor sensor feedback and perform output control functions must be fully approved to UL1998. Section **21.6** and **21.7** describe National Grid requirements for proving of damper position, Section **22.1** for high limit shutdown and Section **21.9** for gas pressure controls. National Grid has accepted The Fireye Nexus, Honeywell Controlinks (R7999) and Siemens LMV/WFM systems for fuel-air control when installed as described in this section. Wiring diagrams of the control system must be included with the burner submittal package.

21.3 Flame Safeguard Controllers

All burners shall be equipped with a **new** flame safeguard (FSG) controller and programmer that match the firing rate of the burner. The wiring diagram must match the actual flame safeguard controller used on the burner. **Sheet 2** lists National Grid approved flame safeguard controllers and programmers used today and in prior years. The combustion safety controller shall insure pre-ignition purge, proven air supply, timed trial for ignition of pilot and main burner on gas, timed trial for ignition on oil and post-purge.

21.3.1 Burners with Inputs of 400,000 Btu/Hr to Under 2,500,000 Btu/Hr.

A FSG/Programmer of the Honeywell model RM7896C, D, RM7897,8,C, D or Fireye BurnerLogix YB110/YP200,YP300 with interrupted pilot, MEP560, or approved equal, as listed on **Sheet 2**, may be used. On loss of main flame the FSG/Programmer must not recycle however, FSG/Programmers with a response time of four seconds may recycle once before locking out.

21.3.2 Burners with Inputs of 2,500,000 Btu/Hr and Higher

A FSG/Programmer of the Honeywell model RM7800L, RM7840L the Fireye E110/EP160, BurnerLogix YB100/YP100, Siemens LFL/LAL/LFE/LME or approved equal, as listed on **Sheet 2** may be used.

21.3.3 Burners with Inputs Under 400,000 Btu/Hr.

Where permitted and minimum rate requirements are met, a flame safeguard relay of the Honeywell Model R4795, RM7895,6,7,8 or Fireye BurnerLogix YB110/YP200,YP300, MEP-260, or approved equal may be used.

<u>In addition the following is required:</u>

1. Direct-spark modules shall prove flame in 4 seconds
2. Common scanner.

3. Integral manual-reset

21.4 Flame Safeguard Controller Replacement

All flame safeguard controller replacements are required to be done with a **new** flame safeguard controller and programmer that will match the firing rate of the existing burner. Used or rebuilt flame safeguard controllers must not be used. The original burner wiring diagram must be revised and submitted to National Grid to document the field wiring changes that were required for proper installation of the replacement unit. Flame safeguard controller replacement must be done by a qualified service provider to ensure proper wiring for safe operation of the burner.

SHEET 2

FLAME SAFEGUARD CONTROLLERS

Flame Safeguard Controllers and programmers required for the indicated input categories:

(A) UNDER 2,500,000 BTU/Hr. INPUT	(B) 2,500,000 BTU/Hr. INPUT AND OVER
Honeywell:4150, 4127, 4140 RM 7896 C, D** RM 7800 M, G RM 7840 M,G RM7897,8 C,D**	**Honeywell**:4150L, 4140L, 4126 BC-7000 (Module 720L-1030 or 720L-2004) BCS 7700 RM 7800 L,E RM 7840 L,E
Fireye 6058, 6060, 6160 6560,5023, 5015 3000, 70D20*, 70D30* MP 560/ MC120p** MEP560/561/562**	**Fireye** 6070, 6080, 6580 (UVP-2S-4580) 5022, 5065, 70D10 E110/EP/EPD160,170 NEXUS BurnerLogix YB110/YP100
BurnerLogix YB110/YP200,YP300 (Interrupted pilot)	
PBC-2 (26CF6) 1010,1011,5020,5021	
UVC-2 (25CU6) 1062, 1063, 5062, 5063 TFG-2 (24CJ5)	**Gordon Piatt** GP 301
	Cleaver Brooks CB 70, CB780 CB784, CB100E, CB110
3010, 3011, 5010 5011	CB Hawk (Requires site specific approval).
	York Shipley YS 7000 (YS 720L Module)
Gordon Piatt GP 101 **Cleaver Brooks** CB 40 **York Shipley** S 7000 (YS 720 G Module) And any listed under Column (B) or Equivalent	**Siemens** LFL/LAL/LFE/LME, LMV,WFM

* Must have fixed open air shutter ** See specific set up sheet

SHEET 3

FLAME SAFEGUARD CONTROLLERS

RE: Use of Honeywell RM7896C,D and RM7897,8,C,D on Temperature Controlled dual fuel burners.

A. On installations where the maximum firing rate of the burner does not exceed 2,500,000 BTU/hour (approximately 2,500 CFH) the Honeywell RM7896C and RM7896D FSG/Programmers may be utilized when configured with a pre-purge card to provide 4 air changes and the JR2 jumper clipped. This configures the unit to recycle once upon loss of main flame. During the recycle period the unit will pre-purge, post-purge and prove pilot prior to opening of main fuel valves for operation. If pilot is not proven the unit will lockout. Additional system restrictions are:

1. Two automatic valves are required in the gas train, as the unit does not have provisions for a "proof-of-closure" input.

2. Burner inlet air shutters must be fixed full open or burner must purge at low fire position for not less than 90 seconds or 4 air changes as the unit does not have provisions to control a modulating motor or accept a shutter position ("high fire") input.

B. The RM7897,8,C, D must be programmed with the following feature set up;

1. 15 Second post purge

2. Interrupted pilot

3. Lock out on loss of main flame or pilot

SHEET 4

FLAME SAFEGUARD CONTROLLERS

RE: Use of Fireye M-Series II on Temperature Controlled dual fuel burners.

On installations where the maximum firing rate of the burner does not exceed 2,500,000 BTU/hour (approximately 2,500 CFH) the Fireye M-Series II FSG/Programmer may be utilized when the following conditions are satisfied:

1. Unit is mounted on a **Fireye MC12OP** Post Purge Chassis. This will provide a 15 second post purge at the end of an operating cycle or after a safety shutdown.

2. Programmer module to be the **Fireye MP560 series** with Dipswitch #8 set to the **"ON"** position (Non-recycle operation). This will cause a safety lockout following any flame failure.

3. Fuel transfer time delay(s) are to be in the individual burner circuits and must be a minimum **of 30 seconds.** The contacts from the fuel transfer relay(s) must interrupt the operating limit circuit for this period. This will insure activation of full post-purge and pre-purge cycles.

4. Two automatic valves are required in the gas train as this unit does not have provisions for a pre-ignition interlock ("proof-of-closure") input.

5. Burner inlet air shutters must be fixed as this unit does not have provisions to control a modulating motor or accept a shutter position ("high fire") input.

6. Dip switch #s 1-4 must be set in the **"OFF"** position and dip switch #5 must be **"ON"** to provide a 90 second pre purge.

7. If the pre purge time is factory engineered for (4) air changes, then the corresponding dip switches may be set as required for proper purging.

SHEET 5

FLAME SAFEGUARD CONTROLLERS

RE: Use of Fireye MEP-Series on Temperature Controlled dual fuel burners

On installations where the maximum firing rate of the burner does not exceed 2,500,000 BTU/hour (approximately 2,500 CFH) the Fireye MEP-Series FSG/Programmer may be utilized when the following conditions are satisfied:

- New Fireye "Modular Micro M" programmer **Model #MEP560 series/MEC120 chassis** is approved for TC burners firing under 2,500 CFH. The dip switches must be set-up as follows during the first eight (8) hours of operation.

- Dip Switch #1 – Open
- Dip Switch #2 – Open (90 sec. pre-purge) or adjusted for factory engineered setting of (4) air changes
- Dip Switch #3 – Open (15 sec. post-purge)
- Dip Switch #4 – Open (10 sec. proven trail for ignition)
- Dip Switch #5 – Open (prove air flow, open at start)
- Dip Switch #6 – Open (non-recycle limits)

21.5 Programmable Logic Controller (PLC) used as a Flame Safeguard

Use of a programmable logic controller (PLC) as a flame safeguard is allowed only on manual fuel changeover burners firing over 30,000,000 Btu/Hr controlled by plant operating engineers. A separate PLC and flame scanner is required for each burner and all custom interface equipment and panels must be built by a UL508 panel shop. The design of a PLC based burner management system must be done by a qualified manufacturer or system integrator with the engineering expertise to provide such service. The logic system and the hardware shall be so designed specifically so that a single failure shall not prevent a safe and appropriate equipment shutdown. Furthermore, programmable logic controllers (PLC) shall be safety designed as detailed in NFPA85.

This type of application is site specific and a separate engineering review is required therefore, electrical diagrams must be submitted to National Grid Dual Fuel Engineering along with the specific sequence of operation for equipment at the site

21.6 Guaranteed High Fire Purge Position

Burner air interlocks for high fire proving shall be provided on all full modulation burners and all burners with inputs of 2,500,000 Btu/Hr and higher. This interlock shall consist of an end switch(s) mounted on the burner air damper(s) to insure that they are in the full open position during the complete pre-purge cycle and proven by the flame safeguard. On burners where the high fire damper is not accessible, an alternate mounting configuration for the high fire switch may be used with the approval of National Grid Dual Fuel Engineering. High fire may be proven from a point on the mechanical linkage where the switch can be securely mounted and properly set. On UL listed electronic linkageless fuel/air management systems with UL1998 software, the electronic feedback may prove the high fire position of the damper (in lieu of end switch) providing it is sensed by the flame safeguard. Additionally, the direct drive shaft of the servomotor must be secured directly to the damper pivot with multiple setscrews and /or a keyway.

21.7 Guaranteed Low Fire Start Position

Low fire start interlocks shall be provided on all full modulation burners and burners with inputs of 2,500,000 Btu/Hr. and over to insure that the burner equipment and damper motor linkages are in the low fire position prior to lighting of the main flame. This interlock shall be proven by the flame safeguard. On UL listed electronic linkageless fuel/air management systems with UL1998 software, the electronic feedback may prove the low fire position of the damper providing it is sensed by the flame safeguard.

21.8 Proven Combustion Air

A UL approved combustion air proving switch mounted internal to the burner shall prove combustion air and be wired to initiate a safety shutdown and lockout when tripped. Additionally, burners firing at 2,500,000 Btu/Hr and above shall have the blower motor starter auxiliary contact wired in series with the combustion air proving switch.

21.9 Gas Train Low and High Gas Pressure Switches

All burners with inputs of 2,500,000 Btu/Hr. and over must include UL listed low and high gas pressure switches on the gas train wired to initiate a safety shutdown and lockout when tripped, see **Sheet 1** for typical gas train layout.

The high gas switch must be installed downstream of both the gas pressure regulator and safety shutoff valves as close to the burner head as possible and shall be set at 150% or less of the measured pressure at high fire as per UL795.

The low gas switch shall be located upstream of the safety shutoff valves and be set at 50% or less of the measured pressure at high fire as per UL795. For systems with a combination pressure regulating safety shutoff valve arrangement, the low gas switch may be located upstream of the appliance regulator providing it is installed and set as described in Section **21.9.2**.

21.9.1 Electronic Pressure Sensor

When an electronic pressure sensor installed upstream of the safety shutoff valves is used to feedback both high and low gas pressure monitoring to a controller, this UL listed sensor may only be used for low pressure safety shutdown. An independent UL listed high gas pressure switch must be installed downstream of the safety shutoff valves for high pressure safety shutdown.

21.9.2 Low Gas Pressure Switch Mounted Upstream of the Appliance Regulator

This arrangement is allowed providing the switch is rated to withstand without damage the maximum inlet pressure to the train, see **Sheet 1** for alternate gas train layout. Also, the following procedure must be used for setting of a low gas pressure switch mounted upstream of the appliance regulator. Readings for the calculation must be taken at high fire. The minimum switch setting is equal to (Pressure drop across the regulator (inlet pressure to the train minus pressure measured at downstream regulator tap), plus pressure measured at the burner head, divided by two).

21.10 Ignition Systems

21.10.1 Burners with Inputs of 400,000 Btu/Hr and Higher

Controls and equipment for an interrupted and proven pilot are required. The proven pilot shall accomplish the lighting of the main burner flame. An interrupted direct spark ignition for oil may be used when the following conditions are met:

1. The maximum fuel oil input directly ignited by electric spark may not exceed 20 gallons/Hr.
2. Burner must remain in proven low fire start until ignition of the main flame is established and proven.

21.10.2 Burners with Inputs of Under 400,000 Btu/Hr

Intermittent pilot or direct-spark modules are allowed providing the flame

safeguard relay proves main flame in 4 seconds utilizing an approved flame scanner. Additionally, with direct spark ignition, burner must be supplied with high and low gas pressure switches wired to initiate a safety shutdown and lockout when tripped.

21.11 Oil Safeties

Oil safeties must be provided as detailed in The National Fire Protection Association (NFPA) Standard for the Installation of Oil Burning Equipment NFPA 31, Standard for Single Burner Boiler Operation NFPA85, The American Society of Mechanical Engineers (ASME) Controls and Safety Devices for Automatically Fired Boilers ASME-CSD-1, Underwriters Laboratory Commercial & Industrial Standard UL296 (ANSI Z96.2) for oil burners, and The New York State Industrial Code Rule 4 and 14 for Construction and Installation of High and Low Pressure Boilers. NYC installations must comply with all requirements of Department of Air Resources Engineering Criteria for Fuel Burning Equipment and the New York City Administrative Code. Pursuant to NYC requirements oil burners firing 20 GPH or higher are to be equipped with a manual reset smoke opacity alarm wired to shutdown the burner when tripped.

21.12 Draft Control

In NYC draft control shall follow the requirements of the New York State Industrial Code Rule 4 and 14, Department of Air Resources Engineering Criteria for Fuel Burning Equipment, The New York City Administrative Code and The New York City Fuel Gas Code. In LI draft control shall follow the requirements of Fuel Gas Code of New York State, New York State Industrial Code Rule 4 and 14, and the local municipality having jurisdiction. All installations shall be designed such that an adequate pressure differential (draft) can be maintained to provide sufficient combustion air and remove the products of combustion under normal operating conditions. Exceptionally high chimneys may require a combination of devices or methods to control draft. Non-automatic flue dampers which cannot be conveniently removed or which are needed in controlling draft, shall be provided with means to securely lock them in a fixed open position.

21.12.1 Barometric Draft Regulator

Barometric draft regulators shall be of the double swing type, which open to relieve a backdraft. A thermally activated, manual-reset cut-off device (spill switch) shall be mounted on the draft regulator and wired to shut-off fuel to the burner and initiate a safety shutdown in case of continued spillage of flue products. Barometric damper size and installation shall follow manufacturer specifications and applicable codes. Where two or more boilers are connected to the same breeching, each boiler shall be equipped with a separate barometric draft regulator and spill switch. In these cases spill switches shall be electrically cross-interlocked to interrupt operation of all boilers should a back draft be detected on any boiler.

21.12.2 Sequential Draft Control

A UL listed automatic sequential draft control system may be used in lieu of a

barometric damper to regulate an outlet damper located in the breeching to maintain constant draft within the furnace under all firing rates. The system shall be equipped with a switch to prove full open damper position during pre-purge and a low draft pressure switch wired to shutoff fuel and initiate a safety shutdown should proper draft be lost. Wiring diagrams of the system must be included with the burner submittal package.

21.12.3 Stub Stack

A draft damper may not be required on stacks serving boilers in one-story industrial/commercial sites which experience positive pressure at a location within three diameters of the stack outlet.

21.12.4 Sealed Breeching

Calculations must be made for proper sizing of the breeching to confirm that the forced draft of the burner is capable of pressurizing the system so that the gases may be properly exhausted. All Breechings experiencing positive pressure shall be completely sealed. On a site specific basis, National Grid reserves the right to require the installation of a high temperature and/or low draft switch inside the breeching, interlocked with the burner controls in the absence of draft control devices.

21.12.5 Induced Draft Fans

Where induced draft fans are installed in the breeching to assist with removal of the products of combustion, they must be wired to operate simultaneous with the burner blower motor to assure proper purge and combustion. Also, an auxiliary contact on the starter of the induced draft fan and/or a differential pressure switch must be wired into the running interlock circuit of the burner. Multiple burners sharing common inducers are required to be electrically cross-interlocked to ensure proper draft for all burners.

21.13 Combustion Air

In NYC fresh air to boiler rooms for combustion shall follow the requirements of the New York State Industrial Code Rule 4 and 14, Department of Air Resources Engineering Criteria for Fuel Burning Equipment, The New York City Administrative Code and The New York City Fuel Gas Code. LI shall follow the requirements of Fuel Gas Code of New York State, New York State Industrial Code Rule 4 and 14, and the local municipality having jurisdiction. At a minimum, legal boiler rooms should have free air openings equal in area to the sum of all boiler breechings or the chimney cross-section whichever is greater. In all cases the boiler room shall be maintained at a pressure not less than outside atmosphere pressure as negative pressure in the boiler room is not allowed. Additional ventilation beyond burner air supply may be required to avoid developing a high boiler room ambient temperature that may be detrimental to operating and maintenance personnel.

21.13.1 Fixed Louvers

The opening to the outdoors for fresh air may be of the fixed open louvered type with unobstructed air flow. If screens are utilized, they shall not be less than 1/4" mesh.

21.13.2 Motorized Louvers

Where motorized fresh air louver(s) are used they must be wired to open automatically during equipment operation. An end switch mounted on the fresh air louver(s) to prove open position is required and is to be wired into the burner limit circuit(s). Multiple burners sharing common louvers are required to be electrically cross-interlocked to ensure proper fresh air for all burners.

21.13.3 Fresh Air Intake or Supply Fans

Fans supplying fresh air to the boiler room for combustion shall be wired to operate automatically during burner operation. A sail switch and/or differential pressure switch mounted on the intake fan is to be wired into the burner limit circuit(s) to prove air intake during burner operation. Multiple burners sharing common fans are required to be electrically cross-interlocked to ensure proper fresh air for all burners.

21.13.4 Exhaust Fans

In NYC, exhaust fans are not to be used in boiler rooms without special approval from the City of New York. In Long Island, exhaust fans are allowed when used in conjunction with fresh air intake fans. The intake air must exceed exhaust by 10% at all times to assure that the boiler room is maintained at a pressure not less than atmospheric pressure. Additionally, the flame characteristics of the burner shall not be influenced by the operation of the exhaust fan. All must be wired to operate automatically during burner operation. A sail switch and/or differential pressure switch mounted on the intake fan is to be wired into the burner limit circuit(s) to prove air intake during burner operation. Multiple burners sharing common fans are required to be electrically cross-interlocked to ensure proper fresh air for all burners.

22.0 Limit Controls

All gas and oil utilization equipment shall be protected by the applicable type of limit controls as detailed in the codes and national standards specified in this document. Each limit control when tripped, shall operate to shut off fuel in the case of unintended temperature, unintended pressure or low water condition.

22.1 Boiler Manual Reset High Limit

Boiler manual-reset high limit for pressure or temperature excess limit control must be a UL353 listed electro-mechanical switch (Honeywell model#L404C or equal) independent of all other operating controllers or sensors. Steam connections to a single pressure

control must be a minimum of ½" pipe. When the excess limit pressure control is connected to a manifold, the pipe used for the common tapping from the boiler must be a minimum of ¾".

22.1.1 Boiler Manual Reset High Limit on Low Pressure Boilers

The boiler manual-reset pressure or temperature excess-limit controls shall be wired to interrupt input power to both the flame safeguard control and operating limits. Interruption of the ungrounded input power conductor to the flame safeguard controller shall stop the heat generating apparatus.

22.1.2 Boiler Manual Reset High Limit on High Pressure Boilers

The boiler manual-reset pressure excess-limit control shall be wired to interrupt the operating limits, shutting off fuel to the burner and initiating a safety shutdown.

22.1.3 Manual Reset High Limit on Ovens, Furnaces, Dryers and Chillers.

The manual-reset pressure or temperature excess limit controls shall be wired to interrupt the operating limits, shutting off fuel to the burner and initiating a safety shutdown.

22.2 Low Water Cutoff

Each low water cutoff or combined feeder/cutoff switch shall be a UL353 listed limit control wired to prevent startup during low water conditions and to shut off fuel prior to the water level of the boiler falling below the visible part of the glass gauge.

22.2.1 Low Water Cutoff on Low Pressure Steam Boilers

Low pressure steam boilers shall have at least two automatic low water cutoffs, one of which may be a combined feeder/cutoff.

22.2.2 Low Water Cutoff on Low Pressure Hot Water Boilers

Low pressure hot water boilers shall have one low water cutoff which when tripped causes a safety shutdown and lockout.

22.2.3 Low Water Cutoff on High Pressure Steam Boilers Under 100 Square Feet of Heating Surface

High pressure steam boilers of under 100 square feet (approx. 12,500,000 Btu/Hr) shall have two low water cutoffs. Tripping of the lower of the two controls shall cause a safety shutdown and lockout.

22.2.4 Low Water Cutoff on High Pressure Boilers 100 Square Feet and Over

High pressure steam boilers of 100 square feet (approx. 12,500,000 Btu/Hr) and over shall have two low water cutoffs, tripping of either of the two controls shall cause a safety shutdown and lockout.

23.0 Fuel Valves

This section details National grid requirements for the use and number of automatic and manual gas and oil valves on the main burner and pilot train based on firing rate. To meet applicable ANSI standards, manufacture's instructions on the supplied equipment may mandate a more stringent valve arrangement. In these cases, the manufacturer's instructions must be followed; however, the requirements of this specification must always be adhered to as the minimum standard for the equipment. All valves must be listed by UL, FM , CSA (IAS) International with US indicator.

Fuel valve 'Push-to-Test' switches must be designed to latch or seal-in a UL listed appliance relay such that the fuel valve being tested will be held in a de-energized state (cutting off fuel) once the test button is depressed initiating a safety shutdown and lockout. The operation of a manual re-set button is required for release of the control relay allowing the next burner operating cycle to occur after the flame safeguard is re-set.

It should be noted that manufacture and installation date(s) are considered during review of the electrical and mechanical diagrams that detail the operating features of on-site equipment. When safety is not compromised, National Grid may allow exceptions to some aspects of this specification, based on the age of the equipment (i.e., "grandfathering".) Therefore, whenever safe and practical, National Grid will evaluate the equipment relative to the temperature controlled specification in effect at the date of manufacture and installation at the facility. Upon request, a field inspection by National Grid Dual Fuel Engineering can be made for an on-site evaluation of the equipment and features.

23.1 Main Oil Valves

23.1.1 Burners with Inputs of 3 GPH (420,000 Btu/Hr) to Under 12,500,000 Btu/Hr. (90 GPH)

Burner shall be equipped with two safety shutoff oil valves in series.

23.1.2 Burners with inputs of 12,500,000 Btu/Hr. (90 GPH) and higher

Burners shall be equipped with two safety shutoff valves in series, one of which incorporates proof of closure wired into the flame safeguard control pre-ignition interlock circuit. Typical types are Asco #HOV1A, Siemens #VOG15, Maxon Series 5000.

23.2 Main Gas Valves

23.2.1 Burners with inputs of 400,000 Btu/Hr to under 2,500,000 Btu/Hr.

Burner shall be equipped with two valves in series, one of which is a safety shutoff valve with a visible stroke position indicator. On burners in this category (except those with full modulation), a UL429 listed combination regulator/diaphragm gas valve, such as the Honeywell V4943 or equal in series with a safety shutoff valve, may be used. As an alternate to two valves, one motorized safety shutoff valve with a visible stroke position indicator and proof of closure over travel may be utilized when wired into a flame safeguard control that has provision for the pre-ignition interlock circuit.

23.2.2 Burners with inputs of 2,500,000 Btu/Hr to under 5,000,000 Btu/Hr.

Burners shall be equipped with two safety shutoff valves (one of which is motorized) in series each with a visible stroke position indicator. Combination regulator/diaphragm gas valves shall not be used on burners firing within this range or higher. As an alternate to two valves, one motorized safety shutoff valve with a visible stroke position indicator and proof of closure over travel may be utilized when wired into a flame safeguard control that has provision for the pre-ignition interlock circuit.

23.2.3 Burners with inputs of 5,000,000Btu/Hr to Under 12,500,000 Btu/Hr.

Burners shall be equipped with two safety shut off valves (each with a visible stroke position indicator) in series, one of which is motorized and incorporates proof of closure over travel wired into the flame safeguard control pre-ignition interlock circuit.

23.2.4 Burners with inputs of 12,500,000 Btu/Hr and Over

Burners shall be equipped with two motorized safety shutoff valves (each with a visible stroke position indicator) in series, both of which incorporate proof of closure over travel wired into the flame safeguard control pre-ignition interlock circuit. A normally open vent valve located between the two safety shutoff valves is also required. A UL listed valve proving system may be substituted for the normally open vent valve (NOVV) when installed as per this specification. For Long Island burners in this category utilizing propane as the alternate fuel, a UL listed valve proving system must be used in lieu of the normally open vent valve. A NOVV is not allowed for use on systems with fuel gas heavier than air as detailed in Section **27**.

23.2.4.1 Valve Proving System as an Alternate to the NOVV

A UL listed valve proving system may be substituted for the normally open vent valve. The valve proving system must be wired to operate on a call for startup locking out the burner prior to pilot ignition and/or after burner shutdown if an internal gas valve leak is detected. Wiring diagrams of the valve proving system must be included with the burner submittal package. See **Sheet 6** for general installation requirements of National Grid accepted systems.

SHEET 6

Valve Proving Systems as an Alternate to the Normally Open Vent Valve.

1. The Karl Dungs model# VDK 200a/CM100 pressure module and control relay may be used instead of a normally open vent valve with the following stipulations:

    a. Both main gas valves must be motorized. (Typical types are Honeywell 4055/V5055 and ASCO AH2/V710, and Siemens SKP series).

b. The interconnecting piping to the VDK unit is to be ¼" steel, schedule 40 or ¼" ID stainless steel tubing utilizing compression fittings.

c. VDK unit to have independent metal support structure.

d. VDK unit shall be wired for operation on shutdown and when possible on start-up.

e. Maximum inlet pressure of 5 PSI

2. The Siemens model# LDU11, LMV,WFM, LFL/LAL/LFE/LME valve pressure proving systems may be used instead of a normally open vent valve with the following stipulations:

   a. Both main gas valves must be motorized. (Typical types are Honeywell 4055/V5055 and ASCO AH2/V710, Siemens SKP series).

   b. LDU11 module must be panel mounted.

   c. Gas train mounted auto-reset type pressure switch(es) of the range and rating to operate safely and properly with the train inlet pressure at the specific site.

3. The Honeywell RM7800L, RM7840L integral valve pressure proving system and combination flame safeguard controller may be used instead of a normally open vent valve with the following stipulations:

   a. Both main gas valves must be motorized. (Typical types are Honeywell 4055/V5055, Asco AH2/V710 and Siemens SKP series).

   b. Gas train mounted auto-reset type pressure switch(es) of the range and rating to operate safely and properly with the train inlet pressure at the specific site.

23.3 Gas Pilot Valves

23.3.1 Burners with inputs under 12,500,000 Btu/Hr.

Burners shall be equipped with one safety shutoff valve in the pilot train.

23.3.2 Burners with inputs of 12,500,000 Btu/Hr and Over

Burners shall be equipped with two safety shutoff valves in series in the pilot train.

23.4 Manual Gas Valves

Manual valves are to be of the lubricated plug or ball valve type with tapings provided on the train or valve for pressure testing. All valves must be listed by UL, FM or CSA (IAS) International with US indicator.

23.4.1 Manual Gas Valves on Main Gas Train

Main burner trains shall be provided with two manual valves, one upstream of the appliance regulator to provide shutoff of gas to the train and an additional manual valve downstream of the automatic valves for leak test purposes.

23.4.2 Manual Gas Valves on Pilot Gas Train

Pilot burner trains shall be provided with one manual valve upstream of the regulator to provide shutoff of gas to the train. Where a combination regulator/valve is used on the burner pilot gas train, a manual valve shall be installed upstream of the combination valve to provide shutoff of gas to the train.

24.0 Installation of M2M Fuel Selection/Meter Read Module for New York City and Long Island

There are numerous systems and equipment currently in use for control of fuel selection and acquisition of meter reading data for TC rate sites in New York City and Long Island. For standardization, National Grid has developed a new **single** device to replace all TC rate mandated fuel control and meter reading equipment for both New York City and Long Island. Also, National Grid no longer uses the “Digi-Span" temperature controller and instead now uses a combined Fuel Selection Automatic Meter Read Module called the M2M Module.

The new M2M Module will be provided, installed and maintained by National Grid however the customer will be responsible to provide a 120 volt AC dedicated circuit and will be required to install certain ancillary devices and wiring detailed in this section. National Grid shall have sole control of adjusting and setting the M2M Module. Although TC rate customers will no longer be required to install a “Digi-Span” controller, they will be required to install a customer interface relay to be wired to the burner for automatic switching and a 120 volt circuit to be wired to a step down transformer to provide low

voltage power for the M2M module. Semi-Automatic TC sites will require that the customer interface relay activate a customer installed alarm panel to alert on-site personnel that manual fuel switchover is required.

The outdoor temperature sensor, step down transformer and customer interface relay are supplied by National Grid and are to be wired as per the approved burner drawings and installed in accordance with this specification. National Grid will terminate all low voltage wiring however the customer will be required to have specific meter and power cabling installed in accordance with this specification. The customer interface relay is used to switch the automatic burner to the alternate fuel or in the case of semi-automatic sites to operate a light and ring a bell signaling an operator to switch to the alternate fuel.

The customer is responsible to properly maintain the customer interface relay, burners and equipment at the site to be fully functional and able to switch to the alternate fuel and back. The fuel switching control circuit shall not be used to start-up or control auxiliary equipment; only National Grid controls shall be wired in this circuit. Where there are two or more burners, the fuel switching control circuit shall be isolated using suitable electro-magnetic switching relays.

On all burner equipment being supplied by a high pressure main, provisions shall be made for the installation of a recycling low gas pressure changeover switch. This switch, supplied by National Grid is to be installed at the inlet to the burner gas train with a valve and a test connection and wired in the fuel switching control circuit in a manner specified by National Grid. This switch must change the equipment immediately over to the alternate fuel and on a low gas pressure condition and back to gas when pressure normalizes. On all burner equipment being supplied by boosters off low pressure main, a gas booster interlock will need to be wired into the fuel switching control circuit along with a National Grid supplied low gas pressure shutdown switch. National Grid Dual Fuel Engineering will provide the diagrams for wiring of these circuits with the approved burner submittal package.

The Customer shall install the National Grid supplied sensing element on the north side or northerly exposure of the building mounted secured without touching the building surface. This sensing element provides feedback to the M2M Module for temperature changeover control. Location of the outdoor sensor can be determined during pre--installation site inspection. The customer is responsible for proper function, maintenance and replacement of the sensor should it fail or be damaged.

Outdoor control sensors are not to be located below grade or in any location that would contradict or interfere with its temperature-sensing function. It shall not be located where it is exposed to direct or reflected sunlight and must be a minimum of three (3) feet above ground level and away from windows, doors, flues, vents, heating devices or openings from the heated area. It shall be located so that it will respond quickly to changes in outdoor temperature.

To obtain the necessary components, contact the National Grid Project Manager assigned to the job. Only one customer interface relay, step-down transformer and sensor is provided per boiler room or plant.

At some sites it may not be practical or possible to operate equipment via automatic fuel

changeover. Factors such as plant process limitations, fuel mixture as well as associated manual operations needed for the alternate fuel may preclude automatic fuel changeover of such equipment. In these special cases, where approved, boilers may change fuels on a "semi-automatic" basis in which the outdoor control actuates an alarm bell and light installed by the customer. Since dual-fuel burners wired for manual (gas-off-oil) fuel changeover will not work automatically, the facility must be manned on a 24 hour per day, 7 day per week basis by personnel who are capable of switching to the alternate fuel and back. It should be noted that the temperature setting of the M2M Module for "semi-automatic" control is normally set 5 degrees F higher than for automatic fuel changeover.

National Grid supplies the initial customer interface relay for new sites however, once a site is operational the customer is responsibility to maintain the customer interface relay and have it replaced should it fail to properly function to National Grid requirements. The customer or his service provider may obtain the exact relay or National Grid approved equivalent at any electrical supply house.

National Grid requires that equipment be installed for remote control and monitoring of sites. This is necessary to monitor gas usage and provide National Grid with the ability to over ride the outdoor temperature control. The new M2M Module will provide the functions of on demand fuel switching and remote meter reading for monitoring of gas usage. The customer will be responsibility for pulling metering and power wiring of the type described in this specification between the meter room, boiler room and M2M module.

National Grid Dual Fuel Engineering will supply wiring diagrams and details for all fuel switching and monitoring circuits required to be installed and wired by the customer for both automatic and semi-automatic TC sites.

24.1 Installation of M2M Module Ancillary Devices

Installation of the National Grid supplied customer interface relay, step-down transformer and sensor is required for all TC sites. Installation shall be in accordance with the manufacturer's instructions and the National Electric Code (NFPA70). NYC installations must further comply with the New York City Electrical Code. The customer interface relay and step-down transformer will be supplied to the customer mounted side by side to a common box cover with a 1900 box extension collar attached.

1. Installing customer interface relay

- The customer interface relay shall be located indoors in the boiler room mounted onto a 4" square "1900" series electrical box with its form-C contact wired to the equipment changeover circuits.
- The 1900 box must be mounted in a dry location, away from excessive heat or cold and be readily accessible.

2. Installing step-down transformer

- The circuit for the 120V/12V step-down transformer shall be a dedicated fused power circuit with the transformer secondary properly grounded. All connections to the transformer shall be made inside the 4" square "1900" series electrical box which is the common box supplied and installed by the customer for mounting of both the transformer and customer interface relay.

- The transformer is to be used solely for the purpose of supplying low voltage power to the M2M Module and customer interface relay. It is not to be used as a power source for any customer equipment or relays.

3. Locating Sensor and Sensor Wire

- Sensor shall be located outside on the north wall and the wire leads shall be coiled in the boiler at the same location as the power and meter wiring leads as detailed in Sections **24.2 and 24.3**. Where site conditions warrant an alternate outside location, the National Grid Project Manager shall be consulted for approval.

- Sensor with 50' lead may be used outdoors.

- The sensor wires can be extended up to 500 feet by splicing an approved 2/C #18 AWG stranded cable to the supplied cable. For outside runs, wire suitable for outdoor locations shall be used.

- All sensor wire splices shall be via mechanical means using solder-less barrel connectors.

- The sensor wire shall be protected from mechanical damage, vandalism and must be run independent of all electric circuits.

4. Completion

- When all ancillary equipment is installed and wired-in, National Grid must be notified in order for the M2M Module to be installed and the low voltage wiring terminated. At that point the fuel switching and meter read circuits will be checked for proper function.

24.2 Control and Monitoring of Automatic TC Sites in New York City and Long Island

- All automatic TC installations require the customer/contractor to install a National Grid supplied sensor, step-down transformer and customer interface relay for fuel switching of the automatic equipment as detailed in Section **24.1**. Cabling connecting the customer interface relay and step-down transformer with the M2M Module and the gas meter with the M2M Module is also required to be installed by the customer. National Grid will terminate this low voltage wiring as the interconnection to the M2M Module will allow National Grid to both fuel switch the automatic equipment (on-demand and based on temperature) and remotely read the gas meter. National Grid Dual Fuel Engineering will provide drawings for the wiring and layout.

- Belden cable #8489 (two pair 18 AWG stranded conductors) or approved equivalent is the required cable for the connection between the step down transformer, customer interface relay (located in the boiler room) and the M2M Module (located near the gas meter for outdoor meter sets and near a boiler room window or opening for sites with indoor meter sets). This cable is to be supplied and installed by the customer/contractor. If the length of the Belden Cable will exceed 500', National Grid Dual Fuel Engineering must be consulted for the appropriate cable re-sizing. Belden cable #9418 ((4/C #18 AWG shielded with drain wire) or approved equivalent is the required cable for the connection between the M2M Module and the gas meter and must be installed as detailed below depending on gas meter location.

    - Outdoor gas meters-The adjacent building wall shall be drilled and sleeved and a ½" nipple installed through the wall into a weather-proof box (capable of accepting 2-½" fittings) mounted on the meter side. For remote meter pads, the outdoor portion of the Belden cable runs must be installed in a ¾" rigid conduit to the remote meter set. The power cable (Belden#8489) must be run from the customer interface relay enclosure in the boiler room to the weather-proof box at the meter pad. The meter cable (Belden #9418) must be coiled up in the weather-proof box. National Grid will install a flexible conduit from the weatherproof box to the M2M module and gas meter and terminate the Belden cables at both ends. Sufficient lengths of the Belden cables must be left coiled for proper connection to all equipment.

    - Indoor gas meters-The Belden cables are not required to be installed in conduit however, these cables must be secured along their routing to the gas meter location to prevent damage from routine activities in the area. The power cable (Belden#8489) must be run from the customer interface relay enclosure in the boiler room to an area inside the boiler room near a window or opening. The meter cable (Belden #9418) must be run from the gas meter to the same location inside the boiler room (near a window or opening) as the power cable. Any and all required wall penetrations must be sleeved with ½" rigid conduit for wire pass-through. Sufficient lengths of the Belden cables must be left coiled for proper connection to all equipment.

24.3 Control and Monitoring of Semi-Automatic TC Sites in New York City and Long Island

The customer must install an alarm panel and bell to signal an operator when switching of fuels is required. The panel must be wired to the customer interface relay and designed to alert plant personnel when switching of fuels is required. For remote monitoring, the customer/contractor is responsible for the installation of a Belden 9418 (4/C #18 AWG shielded with drain wire) for connection from the M2M Module to gas meter. National Grid will supply drawings for the wiring and layout of this equipment. All equipment and wiring must be installed as detailed below depending on gas meter location.

- Belden cable #8489 (two pair 18 AWG stranded conductors) or approved equivalent

is the required cable for the connection between the step down transformer, customer interface relay (located in the boiler room) and the M2M Module (located near the gas meter for outdoor meter sets and near a boiler room window or opening for sites with indoor meter sets). This cable is to be supplied and installed by the customer/contractor. If the length of the Belden Cable will exceed 500', National Grid Dual Fuel Engineering must be consulted for the appropriate cable re-sizing. Belden cable #9418 ((4/C #18 AWG shielded with drain wire) or approved equivalent is the required cable for the connection between the M2M Module and the gas meter and must be installed as detailed below depending on gas meter location.

- Outdoor gas meters-The adjacent building wall shall be drilled and sleeved and a ½" nipple installed through the wall into a weather-proof box (capable of accepting 2-½" fittings) mounted on the meter side. For remote meter pads, the outdoor portion of the Belden cable runs must be installed in a ¾" rigid conduit to the remote meter set. The power cable (Belden#8489) must be run from the customer interface relay enclosure in the boiler room to the weather-proof box at the meter pad. The meter cable (Belden #9418) must be coiled up in the weatherproof box. National Grid will install a flexible conduit from the weatherproof box to the M2M module and gas meter and terminate the Belden cables at both ends. Sufficient lengths of the Belden cables must be left coiled for proper connection to all equipment.

- Indoor gas meters-The Belden cables are not required to be installed in conduit however, these cables must be secured along their routing to the gas meter location to prevent damage from routine activities in the area. The power cable (Belden#8489) must be run from the customer interface relay enclosure in the boiler room to an area inside the boiler room near a window or opening. The meter cable (Belden #9418) must be run from the gas meter to the same location inside the boiler room (near a window or opening) as the power cable. Any and all required wall penetrations must be sleeved with ½" rigid conduit for wire pass-through. Sufficient lengths of the Belden cables must be left coiled for proper connection to all equipment.

25.0 Design and Control of Automatic Changeover Circuits

25.1 Burner Fuel Changeover Design Requirements

The following controls are required for automatic fuel switching operation of all dual fuel burners intended for control with the M2M Module. While the following items will effect automatic switching of fuels, they will not correct improper burner operating sequences, improper combustion characteristics, improper chimney draft or guarantee firing rates. Correct operation of fuel switching and of all these parameters must be demonstrated to the National Grid Field Technician and documented during the equipment start-up. Burners for the Temperature Controlled Rate must have;

1. Proper flame safeguard controller and programmer, operating and safety features as described in Section **21** as required for the burner firing rate.

2. Cross-interlocked UL listed, industrial grade fuel changeover appliance relays wired to break and control the oil and gas operating limits, fuel valves, safety string and required equipment.

3. An individual “Auto-Off-Oil” manual selector switch with positive center off position. A switch with built-in mechanical interlock is required for positive center “Off” delay. When this switch is in the “Auto” position, the M2M Module is in full control of the switching of fuels. When the switch is in the "Oil" position, the burner must only fire on oil. In the “Off” position the burner must not be firing on any fuel. It should be noted, that it will be required that this switch break the operating limits when in the “Off” position if the changeover relays do not provide that function.

4. Burner fuel changeover relays must be protected by individual gas and oil time delays to insure that upon switching from gas to oil or oil to gas, the burner will not simultaneous fire both fuels and will go through a post-purge and pre-purge period before firing on the new fuel. A fixed time delay of a minimum of 30 seconds for fuel changeover is required. The fuel valve relay logic shall be so designed such that upon fuel switching, the main valves of the alternate fuel are not energized prior to the opening of the burner operating limit and initiation of post-purge. For manual burners the “Auto-Off-Oil” fuel selector switch is to provide these switching functions.

   Certain types of burner equipment may require modification of this time delay period. Upon request, National Grid Dual Fuel Engineering will evaluate these cases and may allow for modification of the time delay period when warranted. All time delay circuits and devices are required to be approved by National Grid Dual Fuel Engineering.

25.2 Control Panel and Wiring

1. The control system shall be furnished in a pre-wired, pre-tested control cabinet and shall contain all the necessary circuit protection, motor starters, switches, combustion safety controls (as described in Section **21**), transformers and relays. The cabinet shall meet the NEMA rating for the area in which it is installed.

2. All wiring is to be color coded and/or numbered and of sufficient gauge to carry the designed load. Drawings that accurately reference and document burner terminals and wiring must be submitted.

3. Fuel transfer relays and fixed time delays as described in Section **25.1** shall be provided to accomplish the automatic switching of fuels. These relays are to be activated by the automatic outdoor changeover control. UL listed, industrial grade appliance relays with tinned switching contacts are to be used for this purpose.

4. Two switches are to be provided for all automatic and semi-automatic changeover burners:

   a) Burner “On-Off” switch to remove power from the operating limit

b) "Auto-Off-Oil" fuel selector switch wired to open the operating limit circuit when in the "Off" position. A switch with built-in mechanical interlock is required for positive center "Off" delay.

5. Marked panel terminals shall be provided on the burner for wiring of the 120VAC fuel selection control circuits.

25.3 Master Control of Two or more Burners

Only one outdoor control is installed in each boiler room. For control of two or more burners the outdoor control must be electrically isolated from the burner control circuits, no burner safety interlocks are to be wired into this circuit. This isolation is accomplished by using an electro-magnetic switching relay as the master control switch for the automatic burners and equipment at the site. National Grid Dual Fuel Engineering will supply drawings for the wiring and layout of this equipment.

25.4 Programmable Logic Controllers (PLC) used for Auto Fuel Changeover

It is required that all burner manufacturers using PLC based automatic changeover for fuel selection, utilize UL listed appliance relays with "hard wired" cross-interlocked contacts for the fuel valves, operating and safety strings combined with safety "lockouts" and time delay requirements programmed into the PLC firmware. The manufacturers "silent" digital logic control programming must be submitted to National Grid Dual Fuel Engineering for review. Once approved, a certification sticker reading:" Factory Programmed to National Grid TC Specifications" must be affixed to all PLC's in National Grid territory utilized for this purpose. Modifications to the approved program will require a re-submittal to National Grid Dual Fuel Engineering for review.

25.5 Conversion of a Manual Burner to Automatic Fuel Changeover

The design and construction of fuel changeover panel(s) for conversion of a manual dual fuel burner(s) to automatic changeover control must be done by the original burner manufacturer or a UL508 certified panel shop. In either case, manufacturer drawings must be produced that accurately represent the proposed design and wiring to be used in the modification of the burner(s) at the specified site. Complete drawings documenting the new panel and interface connections with the original burner wiring diagrams (intended to be incorporated into the specific burner(s) at the site must be submitted to National Grid Dual Fuel Engineering for approval prior to the panel(s) being manufactured and physical modification of the burner(s) by the contractor. Furthermore, all changeover panels must be a separate enclosure with UL listed appliance relays and the UL label conspicuously affixed. All field interface wiring must be clearly and accurately labeled and installed in a workmanlike manner so that proper burner operation can be verified by the National Grid technician and future maintenance may be performed using these diagrams.

25.6 Examples of Other Methods of Complying with the Rate

Design and wiring for switching control of all equipment via the "Customer interface relay" controller must be submitted to National Grid for review and approval.

1. Separate gas-fired and oil fired boilers.

2. Suspended or floor mounted large warm-air unitary heating assemblies.

3. Batteries of small-input boilers, coupled together as a single unit, each boiler having its own dual-fuel burner.

26.0 Co-generation, Process and Auxiliary Equipment

26.1 Co-generation Equipment

Co-generation equipment, such as prime movers, may be the only equipment wired off the outdoor control, or they may serve as auxiliaries to a boiler of a large dual-fuel installation. The prime movers may change fuels automatically, or the changeover may be done manually by plant operators at sites manned 24 hours/day and 7 days/week. Interlocking with the outdoor control is different, in these cases:

1. Where the Prime mover is the only equipment wired off the outdoor control, its control circuit must be integrated into the outdoor control for automatic fuel changeover. If the changeover is manual, then the outdoor control activates a changeover alarm and panel light.

2. Where Prime movers have manual fuel changeover and serve as auxiliary equipment in a boiler installation with automatic fuel changeover they require a separate outdoor control. This second outdoor control is set at a higher temperature than the one serving the boilers.

26.1.2 Low Gas Pressure Switch

1. Prime Movers Supplied from Low Pressure Mains: A low gas pressure switch shall be installed upstream of the appliance regulator. Switch shall be wired so as to interrupt the prime mover in case of a low gas pressure condition.

2. Prime Movers Supplied From Boosted Lines: A low gas pressure switch shall be installed in the boosted line, and interlocked in series with other gas booster/prime mover safeties so as to interrupt the prime mover in case of a low gas pressure condition. This switch is in addition to the National Grid supplied low gas pressure switch installed at the service entrance.

3. Prime Movers Supplied From High Pressure Services: A National Grid supplied low gas pressure changeover switch shall be installed upstream of the appliance regulator to interrupt prime mover operation in case of a low-pressure condition. Where compressors are used with substantial compression ratios, other controls may be required.

26.2 Hot Water Heaters

On new Temperature Controlled sites wiring and gas train information on water heaters must be submitted with the heating boiler/burner submittal package. For addition of water heaters onto an existing Temperature Controlled Rate service, contractors are required to consult with the appropriate National Grid Project Manager in Gas Sales Area to assure that the equipment is compatible with National Grid service regulators and metering. Once compatibility is determined, wiring and gas train information on the water heaters must be submitted to National Grid Dual Fuel Engineering.

26.2.1 Summer Water Heaters

1. Such hot water heaters may have straight-gas burners or dual-fuel burners but require 120 volt control.

2. Where the boiler supplies hot water in winter only an alternate gas-fired water heater for summer use may be taken off the Temperature Controlled Rate gas meter provided gas flow can be correctly registered. The settings and hand valve operation of existing hot water supply systems remain the responsibility of the building's superintendent.

3. Summer water heater controls shall be interlocked electrically with the heating boiler using a multi-pole, double-throw manual switch, wired into the burner limit circuits such that either the boiler is on, or the summer heater is on not both simultaneously. Details of this summer switch interlock are to be submitted to National Grid Dual Fuel Engineering for review and approval.

4. On existing Temperature Controlled Rate sites water heaters are not to be added to the gas line without permission by National Grid. Consult the National Grid Project Manager for procedure.

26.2.2 Water Heaters with Dual Fuel Burners

1. If the water heater is for summer use only, the operating requirements detailed in Section **26.2.1** for straight gas burners apply.

2. Where the water heater is for year-round use, it must be wired and tooled for automatic fuel changeover utilizing the proper flame safeguard controller based on firing rate. The burner circuit must be interlocked with the outdoor temperature control and all applicable equipment and fuel changeover features as required by this specification shall be adhered to. Wiring diagrams must be submitted as detailed in Section **29**.

3. The burners and gas train equipment are to be compatible with the existing boiler gas supply pressures, or the installer must provide suitable protection.

26.2.3 Straight Gas Fired Water Heaters of 75,000 Btu/Hr or Less

1. Burners that do not require electrical power for operating and control shall be fitted with a suitable valve locking device or lockable gas cock.

2. Small Type I gas water heaters (75,000 Btu/Hr. or less) are permitted only when the gas flow can be correctly registered on the Temperature Controlled Rate meter.

3. Water heaters having standard gas trains certified for 14”w.c. maximum, must not be connected to gas supply piping operating at higher pressure unless suitable protection such as a lock-up regulator is provided.

4. Pilot gas for the water heater must be taken off a firm rate low pressure supply line.

26.3 Miscellaneous Process Equipment

1. All packaged boilers intended for automatic fuel changeover are required to conform to the requirements of this specification. Equipment will not be accepted for automatic changeover where the fuel connections must be broken or burners must be swung in and out by plant operators.

2. Where it is impractical to change fuels automatically, packaged boilers may operate on a "semi-automatic" fuel changeover basis with the approval of National Grid Gas Sales. This written approval requires that the customer sign a “semi-automatic” agreement. In this case, the outdoor control will operate a light and sound an alarm alerting plant operators to change fuels manually. The alarm must sound when changing over from either fuel and be manually reset by the operator. It should be noted that the temperature setting of the "M2M Module" for “semi-automatic” control would normally be set 5 degrees F higher than for automatic fuel changeover.

3. Gas dryers, gas-fired oven assemblies, manifold burner systems, metal-melting and annealing furnaces, and large gas engines, may operate on this rate either on an automatic or "semi-automatic" changeover basis. Details and wiring drawings must be submitted to National Grid Dual Fuel Engineering Area for review and approval.

4. On automatic changeover installations, straight gas-fired equipment would be shut down immediately when the outdoor control drops to the set point. For gas-fired annealing ovens, process assemblies, etc., where immediate shutdown is not acceptable, shutdown can be after a time delay of up to 4 hours, subject to National Grid approval.

5. Where any "semi-automatic" process equipment on this rate supplies all or part of the building heat requirements in winter, the plant operators are responsible to be on site 24 hours a day, 7 days a week to switch to the alternate fuel if necessary. For premises where such equipment does not provide building heat with plants closed at night and weekends, all equipment must be shutoff. Further, a manual switch is required ahead of the outdoor control, to disable the "semi-automatic" alarm when the plant is not manned.

26.4 Computerized Equipment and Plant Systems

A qualified manufacturer or system integrator with the engineering expertise to provide such service must design the computerized burner and building management systems.

The logic system and the hardware shall be so designed specifically so that a single failure shall not prevent a safe and appropriate equipment shutdown. All custom equipment and panels must be built by a UL508 panel shop. Further, all burner management systems shall be safety designed as detailed in NFPA85.

This type of application is site specific and a separate engineering review is required therefore, electrical and mechanical diagrams must be submitted to National Grid Dual Fuel Engineering along with the specific sequence of operation for equipment function and control at the site.

For multiple large boiler installations (two or more) shutdown will be required to be staggered. This may be accomplished using time delays or building management system controls. The wiring and design of the proposed staggered shutdown method must be submitted to National Grid Dual Fuel Engineering for review and approval.

27.0 Propane as the Alternate Fuel

Propane may be used as the alternate fuel only in Long Island (Nassau and Suffolk) with the approval of the local municipality having jurisdiction. Long Island propane installations must be built to conform to the standards of the LP-Gas Code NFPA58 and The Fuel Gas Code of New York State.

27.1 Propane as a Distributed Plant Back-up Fuel

Vaporized propane as a back-up fuel at TC sites may be connected to the natural gas lines using a manual or automatic three-way valve as described in this section. Customer shall submit to National Grid Dual Fuel Engineering an itemized list of the BTU ratings of all gas utilization equipment at the site. Wiring diagrams for equipment of firing rates of 400,000 Btu/Hr full-load input or greater must also be submitted.

Facilities intending to use an automatic three-way valve for fuel selection must wire the valve control to the “Customer interface relay” outdoor controller. Wiring diagrams detailing the design of this circuit must be submitted. See Section **24.4.1** for control and monitoring requirements of automatic sites.

Facilities intending to use a manual three-way valve for fuel selection must install an alarm panel and bell to signal an operator when switching of fuels is required. The panel must be wired to the “Customer interface relay” and designed to alert plant personnel when both switching to propane is required and back to natural gas. See Section **24.4.2** for control and monitoring requirements of semi-automatic sites.

27.1.2 Interconnection for Stand-by Fuels

Where supplementary propane gas for stand-by use is connected downstream of the National Grid service meter and/or regulator, the customer shall install check valves on both the natural gas and propane piping to prevent back flow. National Grid will provide a piping diagram for location and proper installation of the check valves. A three-way valve installed to admit the stand-by supply, if of the type that completely closes one side before starting to open the other side, shall be

permitted for use in place of check valves.

27.2 Automatic Dual Fuel Propane Burners

National Grid has accepted the Patterson-Kelly "Gemini" burner or approved equal for the purpose of utilizing bottled propane gas as an alternate fuel on automatic dual fuel burners. Customer must submit burner wiring diagrams to National Grid Dual Fuel Engineering for approval and design of the "Customer interface relay" outdoor controller into the burner wiring. See Section **24.4.1** for control and monitoring requirements of automatic sites.

27.3 Burners with inputs of 12,500,000 Btu/Hr and Over

For burners in this category utilizing propane as the alternate fuel, a UL listed valve proving system as described in Section **23.2.4.1** must be used in lieu of a normally open vent valve (NOVV). Regardless of the firing rate, a NOVV is not allowed for use on burners utilizing fuel gases that are heavier than air.

28.0 Gas Engines

Gas engines shall be built to NFPA37 Installation and Use of Stationary Combustion Engines and Gas Turbines.

28.1 Temperature Control of Gas Engines

Facilities intending to use automatic control for fuel selection or cut-off must wire the engine control to the "Customer interface relay" outdoor controller. Wiring diagrams detailing the design of this circuit must be submitted. See Section **24** for control and monitoring requirements of automatic sites in NYC and LI.

Facilities intending to use manual control for fuel selection or cut-off must install an alarm panel and bell to signal an operator when switching of fuels is required. The panel must be wired to the "Customer interface relay" and designed to alert plant personnel when both interruption and resumption of gas consumption is required. See Section **24** for control and monitoring requirements of semi-automatic sites in NYC and LI.

28.2 Gas Train Requirements

Gas trains for engines shall contain at least the following components:

1. Manual shutoff valve upstream of the regulator and automatic safety shutoff valves

2. Regulator, with vent and control line if needed

3. Low-pressure switch (manual reset) upstream of the automatic safety shutoff valves for engines with a 400,000 Btu/Hr full-load input or greater

4. Two automatic safety shutoff valves in series for engines with a 400,000 Btu/Hr full-load input or greater

5. Manual leak test valve downstream of the regulator and automatic safety shutoff valves for engines with a 400,000 Btu/Hr full-load input or greater

6. High-pressure switch (manual reset) downstream of the regulator and the automatic safety shutoff valves for engines with a 2,500,000 Btu/Hr full-load input or greater

28.3 National Grid Supplied Low Gas Pressure Switch

Gas Engines require the installation of the National Grid supplied low gas pressure switch as detailed in this section. An exception to its use can be made for Bi-Fuel diesel engines. Customers must submit to National Grid Dual Fuel Engineering an operating sequence of the fuel curtailment system for review and approval to be granted this exception.

28.3.1 Engines Supplied From High Pressure Services:

A National Grid supplied low gas pressure changeover switch shall be installed upstream of the appliance regulator to operate in case of a low-pressure condition.

28.3.2 Engines Supplied From Gas Boosters:

A National Grid supplied low gas pressure switch shall be installed in the boosted line at the service entrance, and interlocked in series with the gas booster control to interrupt operation in case of a low gas pressure condition.

29.0 Required Site Inspections, Burner Submittals and Start-Up

29.1 Required Site Inspections

1. Installers of dual-fuel equipment are required to contact the appropriate Project Manager regarding meter and service hardware location and for questions on burner gas train arrangement, support, venting, and Temperature Controlled requirements. These pre-installation consultations involve one or more on-site inspections. At the site inspection the HVAC installers and plumbers shall check the boiler rooms or proposed boiler rooms and gas meter locations.

2. At the site inspections, conducted with the participation of National grid Gas Sales Project Manager, the following National Grid requirements must be considered:

   a) Location of the “Customer interface relay” controller and outdoor temperature sensor.

   b) Tapping location for a National Grid low gas pressure switch. (gas booster and services off high pressure mains).

   c) Size, length of run and termination of the required vent lines off the main gas pressure regulator on each burner gas train.

d) Size, length of run and termination of the vent line for any normally-open gas vent solenoid valve piped between the two main gas valves. Where used, the normally open gas solenoid valve is to be vented directly to the outdoors separately from the gas regulator vents and any other vents.

e) Location of National Grid meter/regulator sets off high pressure mains. Length and termination of vent lines from meter/regulator sets. Location of meter/booster layout on low pressure services and service point of entry.

f) Proper anchoring and support of piping and burner gas control trains. Burner gas train flanges or unions shall not be subject to lateral stress.

g) Equipment location and layout for National Grid required remote control switching and gas use monitoring.

29.2 Required Burner Submittals and Start-Up

National Grid approval of burners and equipment to be installed at Temperature Controlled Rate interruptible sites is required. The customer/contractor must submit two sets of burner and equipment wiring diagrams and gas train layout drawings. These prints are reviewed to assure that National grid TC specification requirements are adhered to. Upon approval by National Grid Dual Fuel Engineering a copy is returned to the submitter with comments. This procedure applies to new dual-fuel burner and equipment installations, rate changes, burner replacements of existing dual fuel burners and conversion of existing manual dual-fuel burners being upgraded to automatic changeover.

Installers are reminded that burners and equipment for National grid TC rate must be designed to operate automatically with an outdoor temperature controller. Dual-fuel burners wired for manual (gas-off-oil) fuel changeover will not work with an outdoor control unless the wiring is properly modified. If the facility is manned 24 hours/day, 7 days/week by plant operators able to manually switch to the alternate fuel that facility may be approved for semi-automatic operation.

1. All submittal packages must be accompanied by a completed **'National Grid TC Info Sheet' found on the last page of this specification** and include the following;

2. Two Sets of Burner Wiring Diagrams (**minimum size of 11" X 17"**)-Wiring prints showing all burner and equipment:

   a) Wiring, controls, switches, relays, motors and pumps associated with safe, proper and TC compliant operation of equipment at the site.

   b) Boiler/equipment room draft control, fresh air and combustion air fans and interlocks.

   c) Wiring of valve proving system and/or fuel air ratio systems as applicable.

   d) Wiring of lead-lag, building management system and/or sequential draft control panel with interface drawings properly cross-referenced to burner panel terminals.

3. Two Sets of Burner Gas Train Layout-Piping diagram and components list:

   a) This layout must provide the gas train size, identify component make and model on the gas train, plus the order of their arrangement.

   b) A single line drawing is acceptable. One line for the main gas train and one line for the pilot burner gas train.

4. One complete set of maintenance and operating instruction manuals on the installed equipment.

5. A copy of the manufacturers programming relay bulletin and wiring bulletin for any sequential draft control, low draft pressure switches, and lead-lag controls where used.

6. Initial start-up service and one year warranty on equipment and a service organization with a supply of spare parts in the New York metropolitan area.

7. A written list of any exceptions to this specification for review and approval by National Grid Dual Fuel Engineering prior to purchase of the burner equipment.

8. Forward completed submittals and/or exceptions to:

Bruce Maida-Gas Sales Dual Fuel Engineering
National Grid
8424 Ditmas Ave.
Building 31
Brooklyn, NY 11236
Phone (718) 270-0104
Fax (718) 498-1183

29.3 Formal Approval

National Grid Dual Fuel Engineering reviews the proposed equipment selection and wiring for code compliance, electrical continuity, safe and correct operation and compliance with this specification. Once approved, copies are kept in a master file and are also sent to the National Grid Project Manager for equipment start-up and documentation of compliance with rate structure requirements. One set is returned to the contractor for start-up of the customer's equipment and is to be kept on site in the boiler room for reference in connection with any future maintenance or service.

29.4 Instruction Manuals

A copy of the manufacturer's operating instructions is to be left in the burner control cabinet door or be readily accessible in the boiler room, so this information is available for use by operating and maintenance personnel. Operating instructions should include a copy of the manufacturer's flame safeguard specification sheet.

29.5 Permits

The installing contractor shall obtain all permits necessary to complete an approved installation. The contractor must secure operating and fuel storage permits for all the required work.

29.6 Start-Up

1. The installing contractor shall notify the National Grid Project Manager when work is planned to start. At least one week prior to a start-up, National Grid shall be requested to inspect the installation. If burner corrections are required, it shall be the contractor's responsibility to have a service representative of the burner manufacturer present at the time of start-up.

2. In order to supply gas, National grid Gas Sales Field Technician will check that wiring, controls and draft follow applicable standards and approved drawings. They will also check combustion. The contractor must provide all test equipment to perform tests for draft, carbon monoxide, temperature, smoke and oxygen.

30.0 Installation of Straight Gas Utilization Equipment of 400,000 BTU/Hr and Higher

30.1 Introduction and Scope This section details National Grid operating and safety requirements for new straight gas burners in NYC and LI based on firing rate. To comply with a manufacturer’s requirements, the supplied equipment may need to be constructed and installed to standards more stringent than those contained in this specification. In these cases, the manufacturers published requirements must be followed; however, the requirements of this specification must always be adhered to as a minimum standard for the equipment.

All burners must be UL listed and all components and equipment must be listed by Underwriters Laboratory (UL), Factory Mutual (FM) or CSA (IAS) International with US indicator or other nationally recognized testing agency and must be approved by National Grid and as required by the City of New York or the local municipality having jurisdiction. Further, all boilers and pressure vessels require American Society of Mechanical Engineers (ASME) certification.

Where Factory Mutual (FM), Industrial Risk Insurers (IRI), or other carrier safety requirements govern customer’s insurance coverage, these must be complied with, but in all cases the requirements of this specification must be adhered to as the minimum standard for equipment construction and installation.

All installations in NYC and LI shall comply with the most stringent and latest version of all applicable state, federal and local municipality codes, rules and regulations in addition to The New York State Industrial Code Rule 4 and 14 for Construction and Installation of

High and Low Pressure Boilers. Public schools in NYC must conform to the standards of the School Construction Authority (SCA). New York City installations must further comply with The New York City Fuel Gas Code, Department of Air Resources Engineering Criteria for Fuel Burning Equipment and the New York City Administrative Code. Long Island installations must further comply with The Fuel Gas Code of New York State.

Equipment design, construction and function must conform to the requirements of the following applicable national standards; The American National Standard Institute (ANSI) for Gas Utilization Equipment in Large Boilers ANSI Z83.3 or Gas Fired Low Pressure Steam and Hot Water Boilers ANSI Z21.13, Standard for Single Burner Boiler Operation NFPA85, The American Society of Mechanical Engineers (ASME) Controls and Safety Devices for Automatically Fired Boilers ASME-CSD-1, Underwriters Laboratory Commercial & Industrial Standards UL795 for gas burners and Standard for Oven and Furnaces NFPA86.

The requirements of the following sections for dual-fuel burners apply to straight gas burners unless specifically stated in this section:

17.0 Gas Service Metering, Piping and Available Pressures

18.0 Appliance Regulators, Gas Train Components and Gas Control Venting

19.0 Boiler Construction, Piping and Installation Requirements

20.0 Electrical Safety Requirements

21.0 Combustion Control, Required Safeties and Combustion Air

22.0 Limit Controls

23.0 Fuel Valves

30.2 Burner Operating Modes Based on Firing Rate

These are the **minimum** requirements for control and operation of burners.

30.2.1 Burners with inputs of 400 CFH to under 2,500 CFH

1. “On-Off” burner control

2. Fixed open dampers

30.2.2 Burners with inputs of 2,500 CFH to under 6,300 CFH

1. “Low-High-Off” or “Low-High-Low-Off” operation

2. Air damper drive motor and controls to provide high fire purge

3. Two-stage motorized gas valve actuator with air damper drive such as the Honeywell V4062 or equal and controls to provide and prove low fire start

4. Regulating oil valve with air damper drive and controls to provide and prove low fire start

30.2.3 Burners with inputs of 6,300 CFH to under 12,500 CFH

1. "Full Modulation" operation such that burner will not be in high fire at time of normal operating limit shutdown

2. Modulating drive motor and controls to provide and prove high fire purge via input from the modulation motor end switch

3. Modulating drive motor and controls to provide and prove low fire start on gas and oil and "full modulation" control of;

   a) Gas butterfly valve
   b) Variable firing rate oil valve
   c) Air damper(s)
   d) FGR damper(s)

4. As an alternate to the modulating motor drive a computerized fuel-air ratio controller may be used as described in Section **21.2**

30.3 Guaranteed High Fire Purge Position

Burner air interlocks for high fire proving shall be provided on all full modulation burners and burners with inputs of 6,300,000 Btu/Hr and higher. This interlock shall consist of a modulation motor end switch to insure that the damper is in the full open position during the complete pre-purge cycle and proven by the flame safeguard. On UL listed electronic linkageless fuel/air management systems with UL1998 software, the electronic feedback may prove the high fire position of the damper providing it is sensed by the flame safeguard.

30.4 Flame Safeguard Controllers

All burners shall be equipped with a **new** flame safeguard controller (FSG) and programmer that matches the firing rate of the burner. The wiring diagram must match the actual flame safeguard controller used on the burner. The combustion safety controller shall insure pre-ignition purge, proven air supply, timed trial for ignition of pilot and main burner on gas, timed trial for ignition on oil. Post-purge is required only on burners firing 2,500,000 Btu/Hr and over.

30.4.1 Burners with Inputs of 400,000 Btu/Hr to Under 2,500,000 Btu/Hr.

A FSG/Programmer of the Honeywell model RM7896,7,8 or Fireye BurnerLogix YB110/YP200,YP300, MEP260, or approved equal may be used. FSG/Programmers in this firing range do not require post purge.

30.4.2 Burners with Inputs of 2,500,000 Btu/Hr and Higher

A FSG/Programmer of the Honeywell model RM7800L, RM7840L the Fireye BurnerLogix YB110/YP100, E110/EP160, Siemens LFL/LAL/LFE/LME or approved equal, as listed on **Sheet 2** may be used.

30.4.3 Burners with Inputs Under 400,000 Btu/Hr.

Where permitted and minimum rate requirements are met, a flame safeguard relay of the Honeywell Model R4795, RM7895 or approved equal may be used.

In addition the following is required:

1. Direct-spark modules shall prove flame in 4 seconds
2. Common scanner with Integral manual-reset

30.5 Ignition Systems

30.5.1 Burners with Inputs of 400,000 Btu/Hr to Under 2,500,000 Btu/Hr

Controls and equipment for an intermittent and proven pilot are required. The proven pilot shall accomplish the lighting of the main burner flame.

30.5.2 Burners with Inputs of 2,500,000 Btu/Hr and Higher

Controls and equipment for an interrupted and proven pilot are required. The proven pilot shall accomplish the lighting of the main burner flame.

30.5.3 Burners with Inputs of Under 400,000 Btu/Hr

Direct-spark modules are allowed providing the flame safeguard relay proves main flame in 4 seconds utilizing an approved flame scanner. Additionally, with direct spark ignition, burners must be supplied with high and low gas pressure switches wired to initiate a safety shutdown and lockout when tripped.

PROJECT MANAGEMENT and TECHNICAL SALES SUPPORT

National Grid Gas Sales of New York and Long Island
8424 Ditmas Avenue
Brooklyn, New York 11236

NYC -Telephone # 718-270-5930 Paul Smith
NYC -Telephone # 718-270-5861 James Casella
LI-Telephone # 516-545-6113 Anthony Natale

Service area: All of Brooklyn, Staten Island, Nassau and Suffolk Counties and

Queens - Ridgewood, Middle Village, Glendale, Maspeth, Woodside, Elmhurst, Corona, Forest Hills, Rego Park, Woodhaven, Richmond Hill, Ozone Park, Howard Beach, Jamaica, Hollis, Rosedale, Kew Gardens, Forest Hills, JFK and LaGuardia Airport Areas and the Far Rockaway Peninsula

---

National Grid Gas Sales-Dual Fuel Engineering
8424 Ditmas Avenue
Brooklyn, New York 11236

Technical interpretation, assistance and specific application information can be obtained as follows:

Telephone # 718-270-0104 Bruce Maida

INFO TO BE SUPPLIED BY CONTRACOR.

nationalgrid TC SITE INFORMATION SHEET

Information required on submittals for National Grid Temperature Controlled (TC) installations.

Site address incl. town: _____

Installing contractor: _____

Mailing address _____

Contact Name _____ Ph # _____

** Please circle all that apply*

New TC Cust. Existing Cust. /Replacement Equipt. New/Existing Cust. UL Conversion to Automatic

Back-up Fuel at site _____ Fuel Changeover: Auto Semi-Auto - (letter required)

Boiler Room Fresh Air Provisions Fixed louvers Motorized louvers Intake Fan

Equipment Draft Control: Barometric Damper Stub Stack Induced Draft Fan

Draft Sequencing Relay Sealed breeching

Equipment type: _____ # of Units with same Wiring Diag. _____

Boiler Horsepower _____ Boiler Type: High Pressure Low Pressure

Equipment Mfg/ Model/ Serial # _____

Proposed Max Firing Rate Per Unit - _____ CFH Main Gas Valve Proof of Closure Yes No

Gas pressure required at inlet to gas train _____

Flame Safeguard/Programmer Mfg. & Model No. _____

WIRING DIAGRAM # _____ GAS TRAIN DIAGRAM # _____

_____ (with components list) _____

Equipment type: _____ # of Units with same Wiring Diag. _____

Boiler Horsepower _____ Boiler Type: High Pressure Low Pressure

Equipment Mfg/ Model/ Serial # _____

Proposed Max Firing Rate Per Unit - _____ CFH Main Gas Valve Proof of Closure Yes No

Gas pressure required at inlet to gas train _____

Flame Safeguard/Programmer Mfg. & Model No. _____

WIRING DIAGRAM # _____ GAS TRAIN DIAGRAM # _____

_____ (with components list) _____

Provide 2 copies of all burner and equipment wiring diagrams(s) and gas train layouts(s) with components list as detailed in National Grid's latest Blue Book TC specification requirements. Attach additional sheets as required.

FORWARD COMPLETED SUBMITTAL TO:

Bruce Maida, Manager Dual Fuel Engineering

National Grid, 8424 Ditmas Ave. Bldg #31, Brooklyn N.Y. 11236 Office (718) 270-0104 Fax (718) 498-1183

DO NOT WRITE IN SPACE BELOW

NATIONAL GRID USE ONLY

TYPE OF SERVICE (Gas Main Pressure) : HP LP LP-BOOSTER

PROJECT MANAGER: _____ ONYX # _____

APRROVING ENGINEER: _____ DATE _____